Who Ordered That? Searches for Charged Lepton Flavor Violation

Peter S. Cooper
Fermi National Accelerator Laboratory

When told, in the late 1940's, of the discovery of the muon Isidor Rabi is said to have asked *"Who Ordered That?"*.

This wise-crack has proved to be one of the deepest and most profound questions in particle physics until today. In present language it is: Why are there flavors and generations? Why are there muons and taus in addition to the electron? The same questions apply to the quark and neutrino sectors. 65+ years later we still don't have a decent answer, either experimentally or theoretically. That the number of flavors and generations are equal is, for all we know, a miracle.

So what have we done in the last 65 years?

This is the topic of today's lecture

I'll review the experimental history of searches for Charged Lepton Flavor Violating processes (CLFV) focusing on:

What did they look for?
How did they do it?
How well were they planning to do? How well did they do?
What limited them.

Note all the personal pronouns. These experiments were done by physicists. In the end, their understanding or lack thereof, we're the limiting factors.

This business is the experimentalist's art - in spades!

Some Experimentalists

I.I Rabi
"who ordered that?"
NMR
Nobel Prize 1944

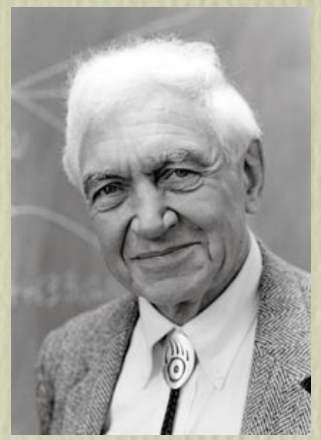

V.W. Hughes
muonium
$\mu^+ e^- \rightarrow \mu^- e^+$
g-2 ...

P.S. Cooper
$\mu^+ \rightarrow e^+ \gamma$,
$K^+ \rightarrow \pi^+\mu^+e^-$
$K^+ \rightarrow \pi^+\nu\nu$

Y.W. Wah
KTeV
$K_L^\circ \rightarrow \pi^0\nu\nu$

D.A. Harris
$K_L^\circ \rightarrow \pi^0 l^+ l^-$
Minos
Minvera

This lecture, and Bob Bernstein's to follow, are based on the review article we have written. The text for these lectures is:

Charged Lepton Flavor Violation: An Experimenter's Guide
Robert H. Bernstein, Peter S. Cooper (Fermilab). Jul 22, 2013.
Published in **Phys.Rept.** FERMILAB-PUB-13-259-PPD
e-Print: **arXiv:1307.5787** **[hep-ex]**

Today's Lecture

- I'm going to focus on a few sequences of experiments; mostly ones in which I've been a principal. While It may be my fault, at least in part, I do know where the bodies are buried. I'll talk about some of the muon and Kaon decay experiments. There are B and Tau decays and other experiments which I'll ignore today.

- I'll explain how they were planned to work and try to explain what actually happened and why it went that way. These two things are never the same.

- I'm aiming this talk at the experimental level of the theorists. It will be non-technical for the most part. No sitting in silence hoping the tech-speak will end! I expect, and welcome, questions and interruptions.

- Much of my career has been designing, as well as doing experiments. It's illuminating to go back and see what worked, what didn't, and why.

- The goal of this lecture is to give a real flavor for what doing this kind of experiment is like.

- There are some common patterns - look for them.

- Some of the graphics in this talk are poor or absent. Sorry - old experiments!

The Tyranny of Ultra Rare Processes

It takes a long time at very high rates

Consider an ultra rare decay process with:

B	$= 1\times10^{-12}$	branching ratio
T	$= 50\%$	trigger efficiency
A	$= 5\%$	geometrical acceptance
ε	$= 40\%$	reconstruction efficiency
N_{obs}	$= N_{decay} * B * T * A * \varepsilon$	
N_{decay}	$= 10^{14}$	Decays required to get one event

This requires 10^7 seconds of beam (e.g. a year or more) at a 10MHz decay rate *to get one event*, or 2.3 times that to set a 1×10^{-12} background free upper limit. If we turned off the weak interaction, with $B=1\times10^{-12}$, a muon would live for a month!

There are backgrounds

Everything else that happens is happening at 10^{12} times the rate, or more.
You kill these, and their friends, or they kill you.

You need a better *trick* than those who preceded you.

CLFV with Muons

There are several CLFV muon processes

$\mu \rightarrow e\,\gamma$

$\mu \rightarrow eee \quad (\mu \rightarrow e\,\gamma^*)$

$\mu^- Z \rightarrow e^- Z$ mu to e conversion

$\mu^+ e^- \rightarrow \mu^- e^+$ muonium to anti-muonium

These are ultra-rare decays or transitions whose rates go like g^2/m^4 and $\alpha g^2/m^4$ where g is a coupling constant and m a new interaction mass scale. If $B=10^{-12}$ and $g=G_F$ then m~100 TeV!

At the G_F^2/M_W^4 level is normal muon decay

$\mu^+ \rightarrow e^+ \nu_\mu \nu_e$

at a decay rate of 450 kHz (τ_μ = 2.2 μsec). In material this can be a higher rate for μ^- due to muon nuclear interactions. The observable electron energy spectrum in this 3 body decay is the Michel spectrum with an endpoint at half the muon mass; 52.8 MeV

History of $\mu \rightarrow e\gamma$, $\mu N \rightarrow eN$, and $\mu \rightarrow 3e$

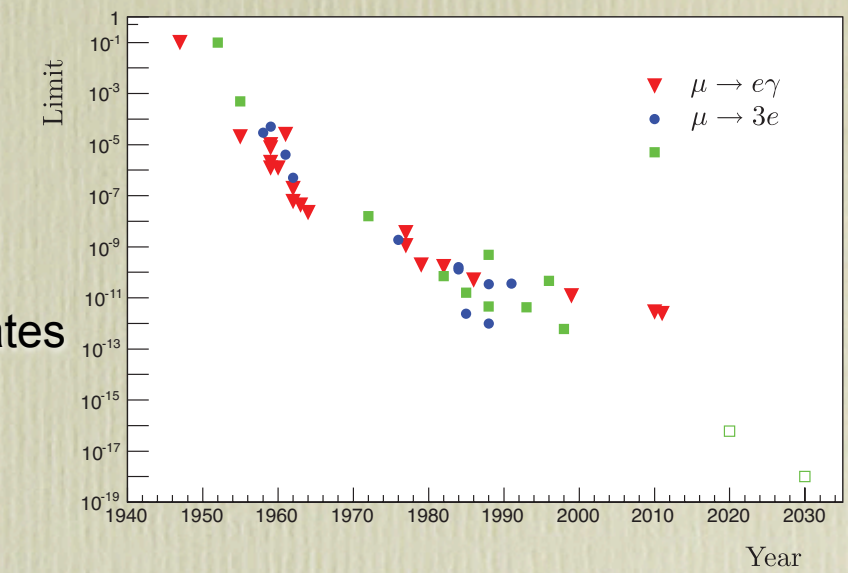

Michel (electron energy) Spectrum

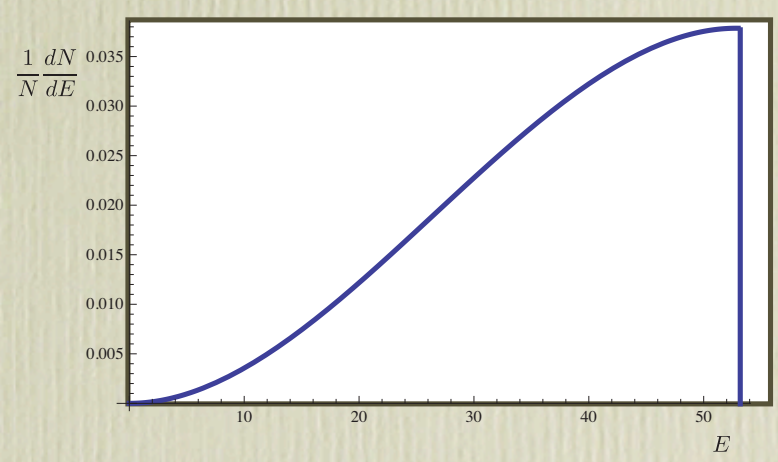

Muons Physics 101

Low energy Muons are not the particle physics we know at Fermilab

- Muons come from Pion decay, usual at rest, where they are 30 MeV/c (T=4.3 MeV)
- At 30MeV/c electrons and positions are penetrating particles
- A sheet of paper will stop all 30 MeV/c Muons ($dE/dx \sim 1/\beta^2$ = 20 MeV/g-cm^2)
- annihilation radiation (511's) from positrons are a bath everywhere.

Surface Muon Beams

Intense muon beams are "surface" beams, invented by Ted Bowen (U Arizona)

- Protons from the machine traverse a thick target (e.g. 1ma, 800 MeV @ LAMPF)
- many pions are produced in the target (~10^{16}/sec average rate)
- many of those range out and stop
- π^- are captured in the target nuclei (Carbon at LAMPF), interact and disappear
- π^+ hang out until they decay (26 nsec)
- π^+s which decay near the surface of the target produce a raging flux of isotropic polarized μ^+ (20 MHz average rate, 500 MHz instantanous).
- The time structure of the muon beam is the time structure of the protons folded with the pion lifetime (530 μsec at LAMPF).

$\mu^+ \rightarrow e^+e^+e^-$ Sindrum @ SIN 1983-8

1×10^{-12} search for $\mu^+ \rightarrow e^+e^+e^-$

Experiment

- Stopped muon beam at SIN (PSI) Cyclotron
- 5 MHz in stopping target (good duty factor)
- five concentric cylindrical MWPC chambers
- 0.33 T Solenoid
- Trigger scintillators outside

Lots to Measure

- 3 good electron tracks
- good vertex in stopping target
- muon mass

Issues

- FASTBUS electronics (when it was the new thing)
- Clever pattern recognition in an era of expensive computing

Results

- Br < 2.4×10^{-12} A. Van der Schaff *et.al*. NIM A240, 370 (1985)
- Br < 1.0×10^{-12} U. Bellgrard *et.al.* Nucl Phys B A240, 1 (1988)

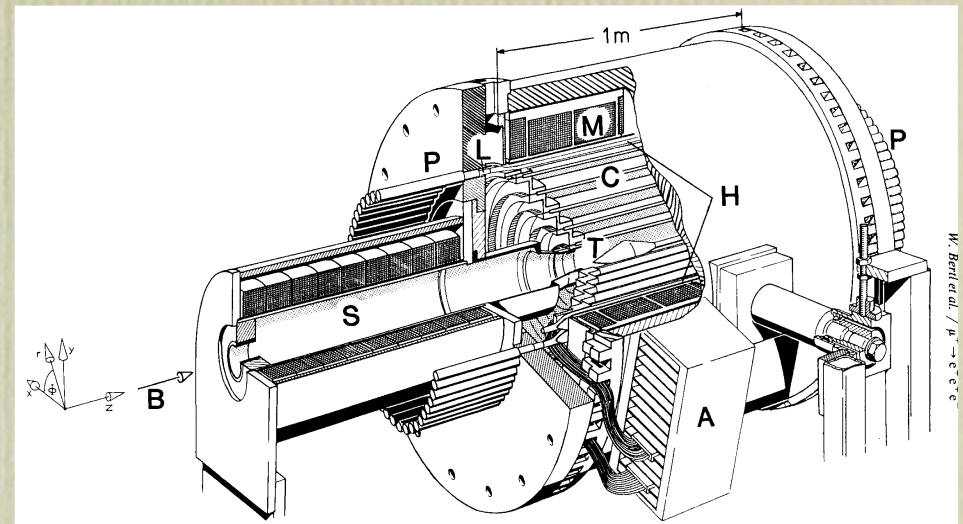

Fig. 2. View of the SINDRUM spectrometer. B, muon beam; S, focussing solenoid; T, Target; C, five cylindrical multiwire proportional chambers; H, hodoscope of 64 scintillators; L, light guides for the hodoscope; P, 128 photomultipliers; A, preamplifiers for the cathode strips and amplifier/discriminators for the anode wires; M, normal conducting coil of the magnet. Also indicated is the coordinate system for the present experiment.

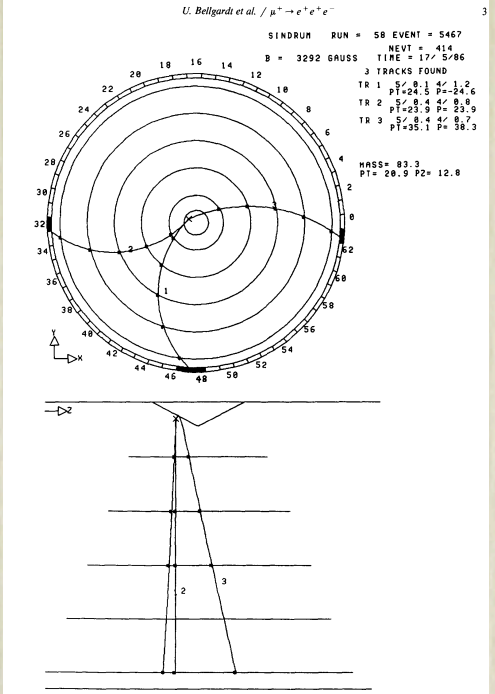

Fig. 1. A reconstructed event shown in the r-φ and r-z projections.

$\mu^+ \rightarrow e^+ \gamma$ Experiments - decay at rest

What's to measure?

$E_e = m_\mu/2 = 52.8$ MeV energy/momentum
$E\gamma = m_\mu/2 = 52.8$ MeV energy/momentum
back to back angles
in time timing

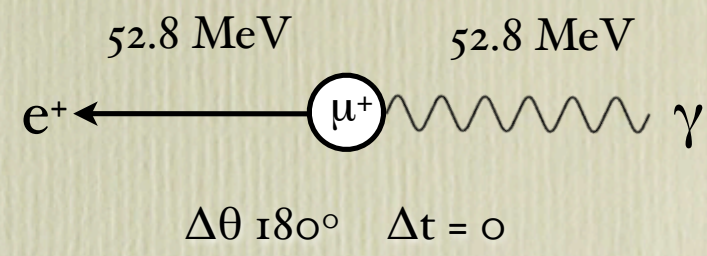

Measurement Issues

Beam duty factor
Resolution
Non-Gaussian tails
Rate effects (accidentals, pile-up)
Background $\mu^+ \rightarrow e^+ \gamma \nu\nu$, internal Bremsstralung (IB)

Experiment	Crystal Box	MEGA	MEG
Date	1986	1999	2011
Rate (stops/sec)	4×10^5	1.5×10^7	2.9×10^7
Duty Factor	5–10%	3%	$\approx 50\%$
ΔE_γ	8.0%	1.7 or 3.0%	4.5%
$\Delta\theta_{e\gamma}$(mrad)	87	33	50
ΔE_e (at ≈ 53 MeV)	8.0%	1.0%	1.5%
$\Delta t_{e\gamma}$(nsec)	1.2	1.6	0.305
Acceptance	0.17	4×10^{-3}	0.18
Muon Stops	1.35×10^{12}	1.2×10^{14}	1.8×10^{14}
90% CL Limit	4.9×10^{-11}	1.2×10^{-11}	2.4×10^{-12}

How?

3 generations of experiments chose differently
calorimetric energy / magnetic momentum
position or angles and timing from these

$\mu^+ \rightarrow e^+ \gamma$ Crystal Box@LAMPF 1977-86

Experiment

LAMPF "surface" muon beam P=29 MeV/c
LAMPF was/is a linac with a small duty factor

A non magnetic detector using 396 NaI crystals
(R. Hofstadter was a collaborator)
- e^+ and γ energies measured calorimetrically
- Electron direction and decay point with a cylindrical drift chamber
- Photon direction from position in NaI crystals
- Timing from NaI signals (1.2 nsec)

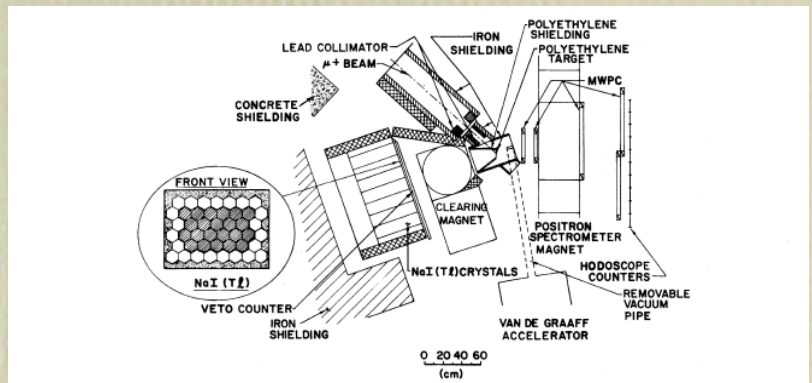

FIG. 1. Plan view of the experimental apparatus. The inset shows the face of the NaI(Tl) array as seen from the target. The Van de Graff was used for NaI(Tl) calibrations.

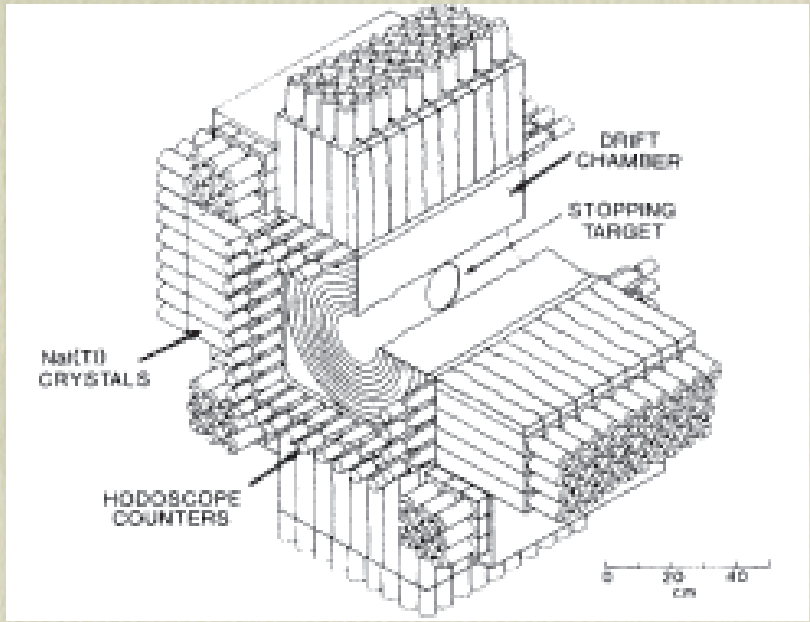

Performance

Resolution goals largely achieved
Proposed Br < ~10^{-11}
Achieved Br < 4.9 x 10^{-11}

Limitations

NaI is slow (1 μsec pulses)
This technique won't go to much higher rates

$\mu^+ \rightarrow e^+ \gamma$ MEGA@LAMPF 1985-99

Experiment

LAMPF "surface" muon beam P=29 MeV/c
Magnetic detector LASS(SLAC) spectrometer magnet
- 2m inside diameter, 1 Tesla, superconducting solenoid
- Electrons measured magnetically with high rate MPWCs (electron arm)
- Electron direction and decay point measured with 8 very high rate cylindrical MWPC's
- Photon energies measured by pair conversion tracking in Drift chambers
- Photon direction and timing from scintillators

I was responsible for DAQ electronics and DAQ.

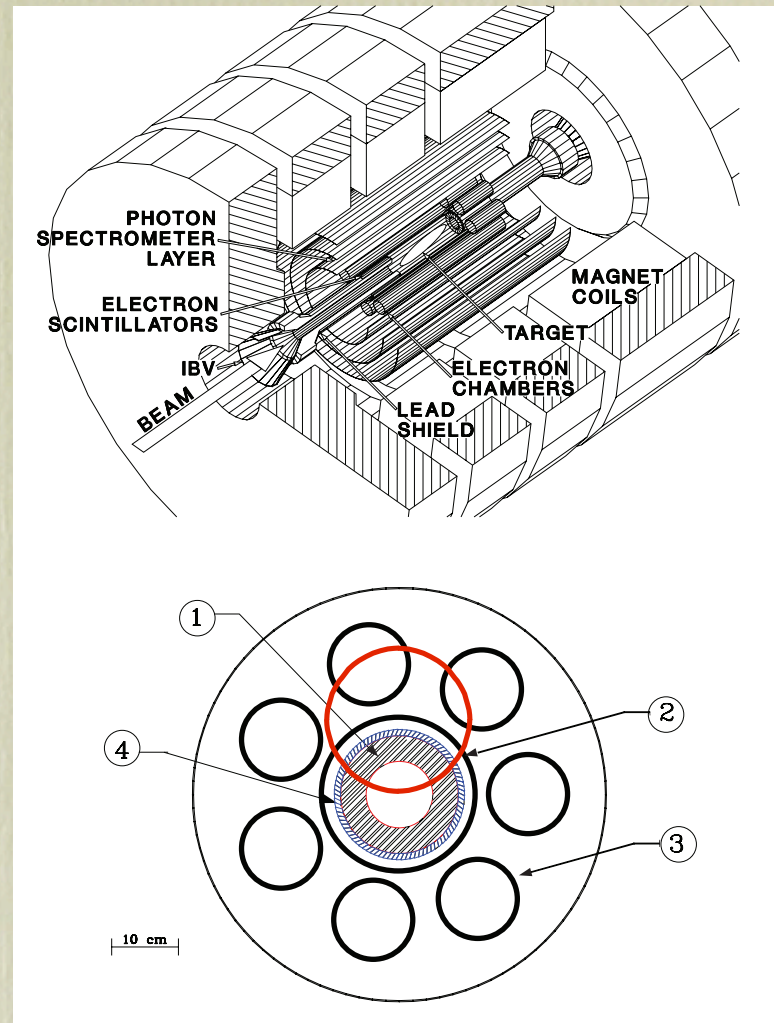

Concept

- Photons separated from positrons by the field (Mega's *trick*)
- 500 MHz of μ^+ stops,
- Internal Bremstralung α/π~1MHz of $\mu^+ \rightarrow e^+ \nu\nu\gamma$
- γs converted and pairs tracked with drift chambers

$\mu^+ \rightarrow e^+ \gamma$ MEGA@LAMPF 1985-99

Limitations

- only 5% of photons convert

- 3% LAMPF duty factor. - electron arm MWPC's *scream in pain* at the rate. There are 10 Michel positrons in a 20 nsec gate. Many hit several chambers several times as they spiral.

- A cyclotron (e.g.PSI) would have been much better.

Performance

Proposed Br < 0.9 x 10^{-13} (x500)
Descoped Br < 4 x 10^{-13} (x100)
Achieved Br <120 x 10^{-13} (x4)
Still the world's best for 14 years

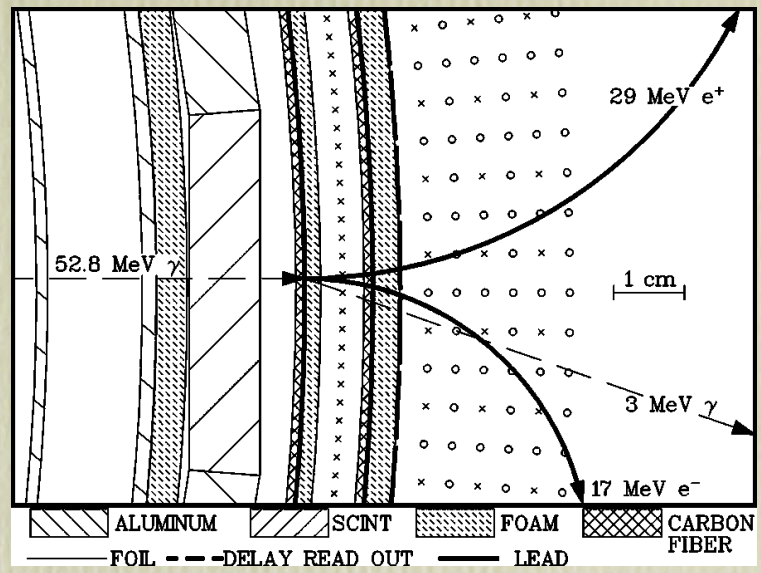

FIG. 5. A cross section of a pair spectrometer layer, showing the aluminum support cylinder for an inner layer, and the timing scintillators, conversion cylinders, MWPC and drift detectors for the next outer layer. A typical conversion in the first conversion cylinder is shown.

$\mu^+ \rightarrow e^+ \gamma$ MEGA@LAMPF 1985-99

Problems

electron arm MPWC cross-talk
- limited the tolerable intensity
- reduced the electron reconstruction efficiency
- compromised the energy and angular resolutions

Photon arm delay line cathode cross-talk
- limited the tolerable intensity
- reduced the photon reconstruction efficiency
- compromised the energy and conversion point resolutions

Death by a large number of losses ([few]^5). The curse of having lots of things to measure.

All of this is written down in PRD 65,112002 (2002) by Bob Tribble (yes - that Bob Tribble).

TABLE VII. The contributions to the signal sensitivity of the MEGA experiment at the design stage and after a complete analysis of the data.

Quantity	Designed	Achieved	Degradation factor
$N_{e\gamma}$ (90% C.L.)	$\leqslant 2.3$	$\leqslant 5.1$	2.2
$\Omega/4\pi$	0.42	0.31	1.4
ϵ_e	0.95	0.53	1.8
ϵ_γ	0.051	0.024	2.1
N_s	3.6×10^{14}	1.2×10^{14}	3.0
Total factor			34.9

TABLE VIII. The contributions to the background sensitivity of the MEGA experiment at the design stage and after a complete analysis of the data.

Quantity	Designed	Achieved	Degradation factor
R_μ (MHz)	30.0	15.0	0.5
$t_{e\gamma}$ (ns)	0.8	1.6	2.0
E_e (MeV)	0.25	0.54	1.5
E_γ (MeV)	1.7	1.7,3.0	1.6
$\theta_{e\gamma}$ (deg)	1.0	1.9	3.6
θ_γ (deg)	10.0	10.0	1.0
η_{IBV}	0.2	1.0	5.0
Total factor			43.3

$\mu^+ \rightarrow e^+ \gamma$ MEGA@LAMPF 1985-99

What might have made this better?

Simulation

Aren't simulation tools much better now? (B Tschirhart)

MEGA was extensively simulated with EGS4 + pieces of GEANT
The background processes, energy loss and all the other physics were simulated well.

The digitizations we clearly not done well enough. The details of the high rate behavior of the detectors and electronics we not captured in the simulation.

Simulation is a tool. What you do and don't build with those tools is what matters.

Detector Prototyping

Many detector prototypes were done. None were exposed to *battle condition* rates, primarily because there was no way to do so.

Reconstruction

A serious attempt at pattern recognition and track (helix) reconstruction was not done early enough to influence the design of the electron arm spectrometer.

$\mu^+ \rightarrow e^+ \gamma$ MEG@PSI 2002-13+

Experiment

A next generation $\mu^+ \rightarrow e^+ \gamma$ search
"surface" muon beam P=29 MeV/c @ PSI

- Magnetic detector with a shaped field solenoid spectrometer magnet.
  + field shape suppresses P_z=0 Michel decays
  + greatly helps the pattern recognition problems
  + COnstant projected Bending RAdius independent of emission angle. (CORBA)

- Drift chamber electron spectrometer

- LXe photon calorimeter with 10% solid angle
  +80% of photons make it to the LXe
  +800 l LXe with 846 PMTS in the LXe to directly detect scintillation light.

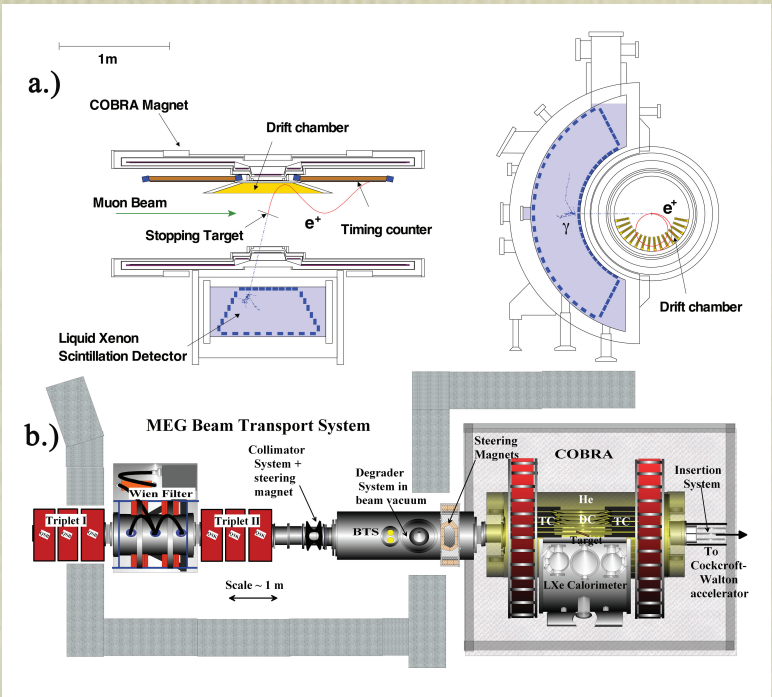

$\mu^+ \rightarrow e^+ \gamma$ MEG@PSI 2002-13+

Performance

Proposed	Br < 1.0×10^{-13}
2010	Br < 280×10^{-13}
MEGA(1999)	Br < 120×10^{-13}
2011	Br < 24×10^{-13}
2013	Br < 5.7×10^{-13}
Proposed	Br < 6.7×10^{-14}

11 years and still at it

Problems

- only 1/3 of LXe light seen in 2007

- better electronics and a very careful calibration with a Cockroft-Walton accelerator and charge exchange ($\pi^+ \rightarrow \pi^0$) in 2009

- After several runs and upgrades neither electron nor photon detectors have yet made their goals.

They have proposed another round of upgrades and a new run

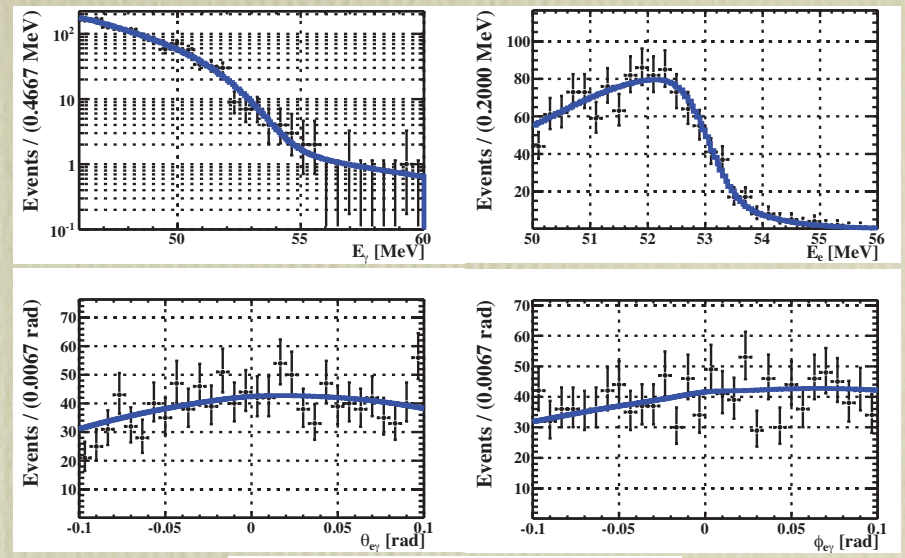

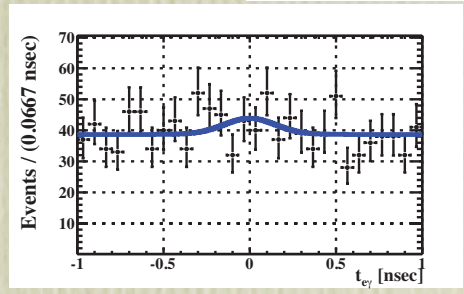

Variable	Foreseen	Obtained
ΔE_γ (%)	1.2	1.9
Δt_γ (psec)	43	67
γ position (mm)	4 (u,v), 6(w)	5(u,v),6(w)
γ efficiency	> 40	60
Δp_e (keV/c)	200	380
e^+ angle (mrad)	$5(\phi_e), 5(\theta_e)$	$11(\phi_e), 9(\theta_e)$
Δt_{e^+} (psec)	50	107
e^+ efficiency (%)	90	40
$\Delta t_{e\gamma}$ (psec)	65	120

CLFV with Kaons

There are several CLFV Kaon decay processes

$K^0_L \rightarrow \mu^{\pm}e^{\mp}$ (Axial Vector and Pseudoscaler)
$K^0_L \rightarrow \pi^0\mu^{\pm}e^{\mp}$
$K^+ \rightarrow \pi^+\mu^+e^-$ (Vector and Scaler)
$K^+ \rightarrow \pi^+\mu^-e^+$
$K^+ \rightarrow \pi^-\mu^+e^+$ (total lepton number violating)

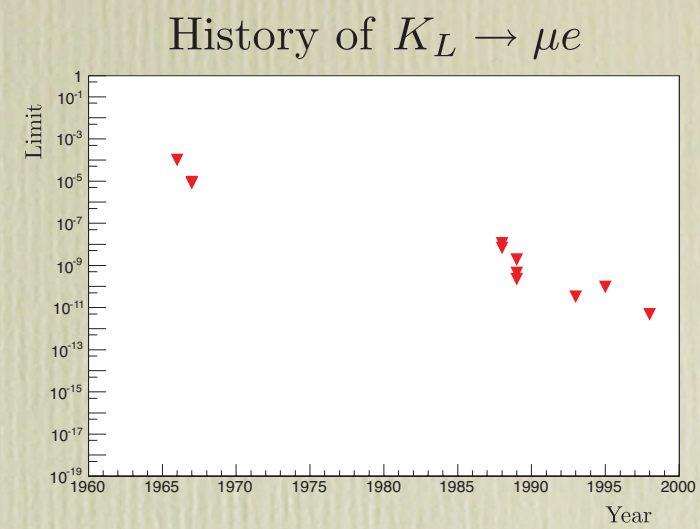

These are ultra-rare decays or transitions whose rates go like g^2/m^4 and $\alpha g^2/m^4$ where g is a coupling constant and m a new interaction mass scale. If $B=10^{-12}$ and $g=G_F$ then m~100 TeV. Just like muons

Kaons have many more decay modes than muons so many more potential sources of background. They also come with lots of either neutrons and gammas or charged pions.

The hadronic structure of the kaon makes normalization less clear than muon decay. We should have such troubles as needing to understand the normalization!

Kaons Physics 101

Kaon Beams are a stock in trade of proton synchrotrons

- Every machine above a few GeV which puts protons on a target makes Kaons
- e.g. Miniboone's ν_e background is from K_{e3} ($K \rightarrow \pi e \nu_e$) from the FNAL 8 GeV Booster
- Kaons are always a fraction of everything produced.
- In almost all cases the time structure of the kaon beam is the same as that of the protons on target.

Neutral Kaon Beams

- Neutral beams are broadband, momentum unselected
- Neutrons (>1 n/K^0), Lambdas (Λ^0) and lots of photons
- lead filters early on to kill some photons are common

Charged Kaon Beams

- Full experimental control of momentum, angles,...
- 5% charged kaons is doing well
- backgrounds are pions and protons in a positive beam

Decay Experiments

- Kaon decay experiments are a mature technology; 50+ years.
- Not as mature as muon experiments - but almost
- Fitch and Cronin won a Nobel prize for a 1964 BNL experiment

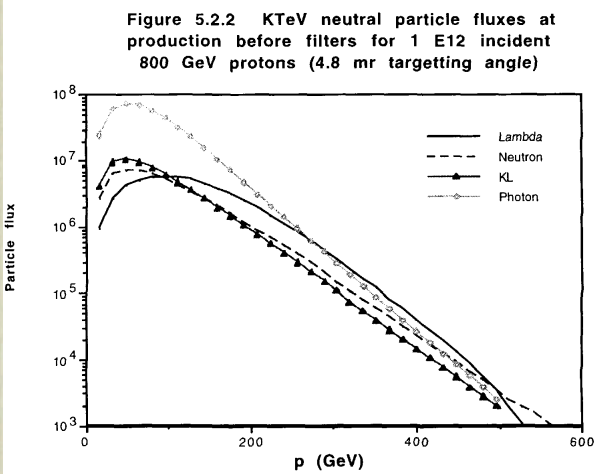

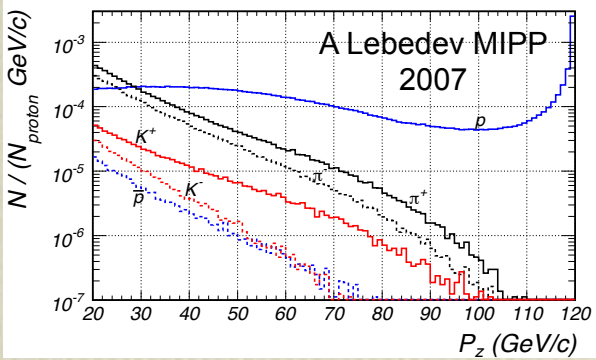

$K_L^0 \rightarrow \mu\, e$ BNL 791 / 871 1984-98

1×10^{-12} search for $K^0_L \rightarrow \mu^{\pm} e^{\mp}$

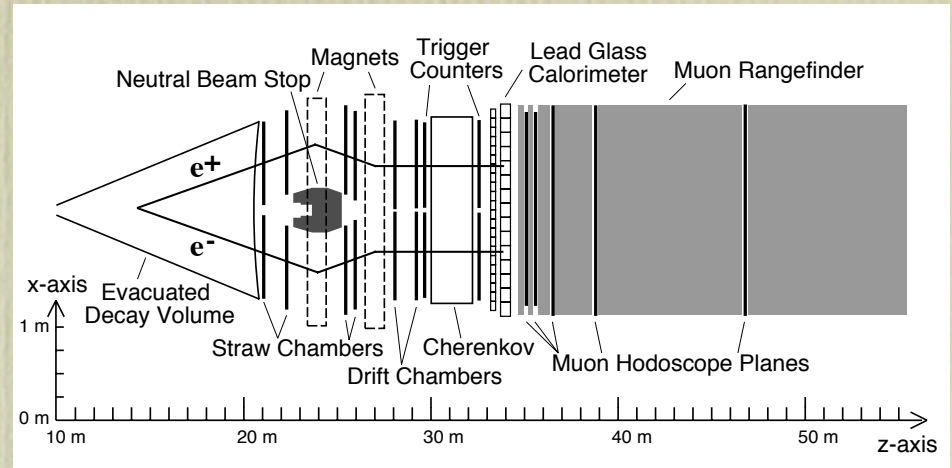

Experiment

- 250 MHz K^0_L beam
- Double bend DC spectrometer to give two momentum measurements
- Cherenkov PID on both sides.
- 2nd experiment dumps the neutral beam to improve acceptance

Fancy, for it's day, level 3 software trigger using SLAC 3081E IBM emulators

Straw-tube Drift chambers were a major innovation

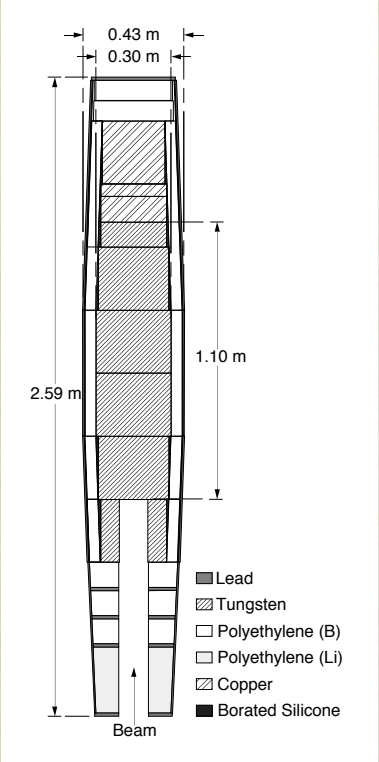

Issues

- E791 had just a beam hole
- The double bend hurt the 2 track acceptance
- The beam dump in the middle of the experiment wasn't humble but worked well.

$K_L^0 \rightarrow \mu\, e$ BNL 791 / 871 1984-98

Results

< 39 x 10^{-12} K. Arisaka, *et.al.* PRL 70, 1049(1993)
< 4.7 x 10^{-12} D. Ambrose, *et.al.* PRL 81, 5734(1998)

Also
$K^0_L \rightarrow e^+e^-$ Br = 8.7±~5 x 10^{-12} 4 events D. Ambrose, *et.al.* PRL 81, 4309(1998)
still the lowest branching ratio ever measured.
$K^0_L \rightarrow \mu^+\mu^-$ Br = 7.18±0.17 x 10^{-9} 6200 events D. Ambrose, *et.al.* PRL 84, 1389(2000)

This was one fine experiment!

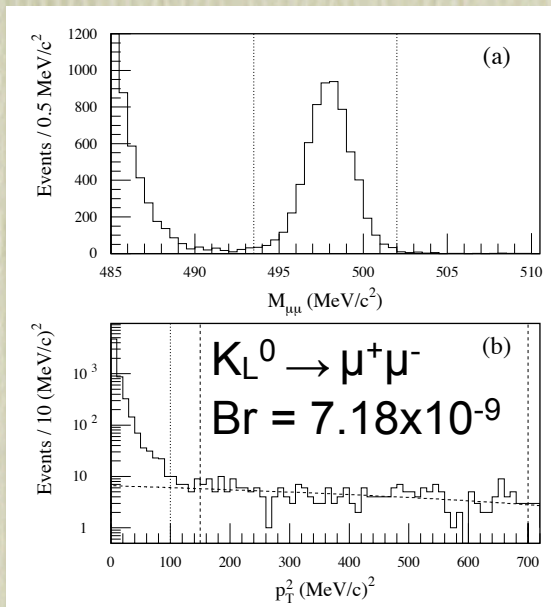

FIG. 1. Reconstructed invariant $\mu^+\mu^-$ mass (a) and p_T^2 (b), the latter showing the linear background subtraction. Vertical lines denote the signal (dotted) and fitting (dashed) regions.

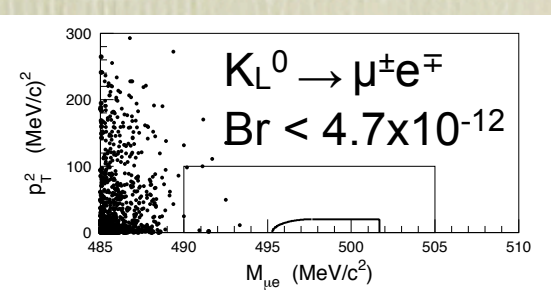

FIG. 4. Plot of p_T^2 versus $M_{\mu e}$. The exclusion region for the blind analysis is indicated by the box. The signal region is indicated by the smaller contour.

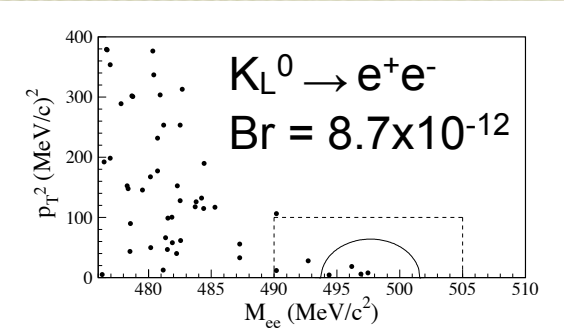

FIG. 2. p_T^2 versus M_{ee} for $K_L^0 \rightarrow e^+e^-$ candidates. The dashed line shows the exclusion region. The solid curve bounds the signal region.

$K^+ \rightarrow \pi^+\mu^+e^-$ BNL 777/865 1983-2005

1×10^{-11} search for $K^+ \rightarrow \pi^+\mu^+e^-$
also $K^+ \rightarrow \pi^+e^+e^-$
$\rightarrow \pi^+\pi^0 \rightarrow e^+e^-$, μ^+e^-

The trick: $K^+ \rightarrow e^-$ violates $\Delta S=\Delta q$
small SM backgrounds

D line at AGS 6 GeV/c > 400MHz
unseparated beam, 20MHz K^+

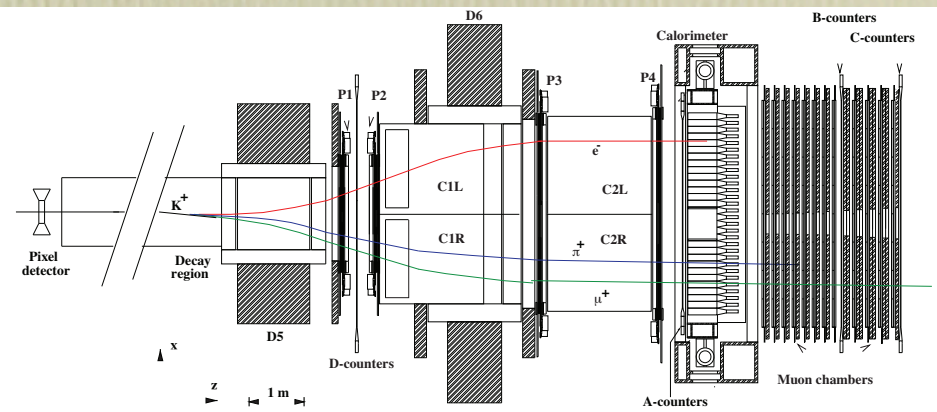

Figure 31: Plan view of the BNL-865 detector. A $K^+ \rightarrow \pi\mu e$ event is superimposed. C1 and C2 are gas Çererkov counters; P1-4 are proportional chambers; D5 and D6 are dipole magnets. A–D are scintillation counter trigger hodoscopes. The calorimeter was an early use of the Shaslyk design as described in Atoyan *et al.* [1992].

Magnetic MWPC detector
- Dual magnetic spectrometer
- Hole for the beam. No K^+ detection
- "*Never hit a pion - you'll only make it mad*" R. Taylor 1972
- Dual Cherenkov PID (π^+/μ^+, e^-)
- Muon range stack
- Shashlik photon calorimeter

Lots to Measure
- Three body mass
- Reconstructed K^+ points back the the production target
- 3 track vertex quality
- PID

Mike Zeller and I designed E777 in 1982 - (my fault as usual)

$K^+ \rightarrow \pi^+\mu^+e^-$ BNL 777/865 1983-2005

E777 results

21 x 10^{-11} A.M. Lee *et.al.* PRL 64, 165(1990)

Issues

Had to run at /1/2 rate

Beam duty factor (spill structure)

Trigger - 10x beam halo gives 1000x trigger rate

Hardware rate capabilities

at least in the beginning MPWC wouldn't live on plateau (93% plane efficiency, 0.93^{12x3} is a small number)

Rate effects (accidentals, pile-up, delta rays)

π^+ Mis-ID ($x10^{-3}$) (design 1.0)

	C_1	C_2
low rate	< 0.3	0.6 ± 0.4
high rate	0.8 ± 0.8	3.0 ± 1.5

Reconstruction Efficiency

geometrical efficiency ~5%

rate dependence (random triggers added to low rate taus (K-3pi)

low	50%	100%	150%
100%	75%	58%	50%

$K^+ \rightarrow \pi^+\mu^+e^-$ BNL 777/865 1983-2005

The way things used to be

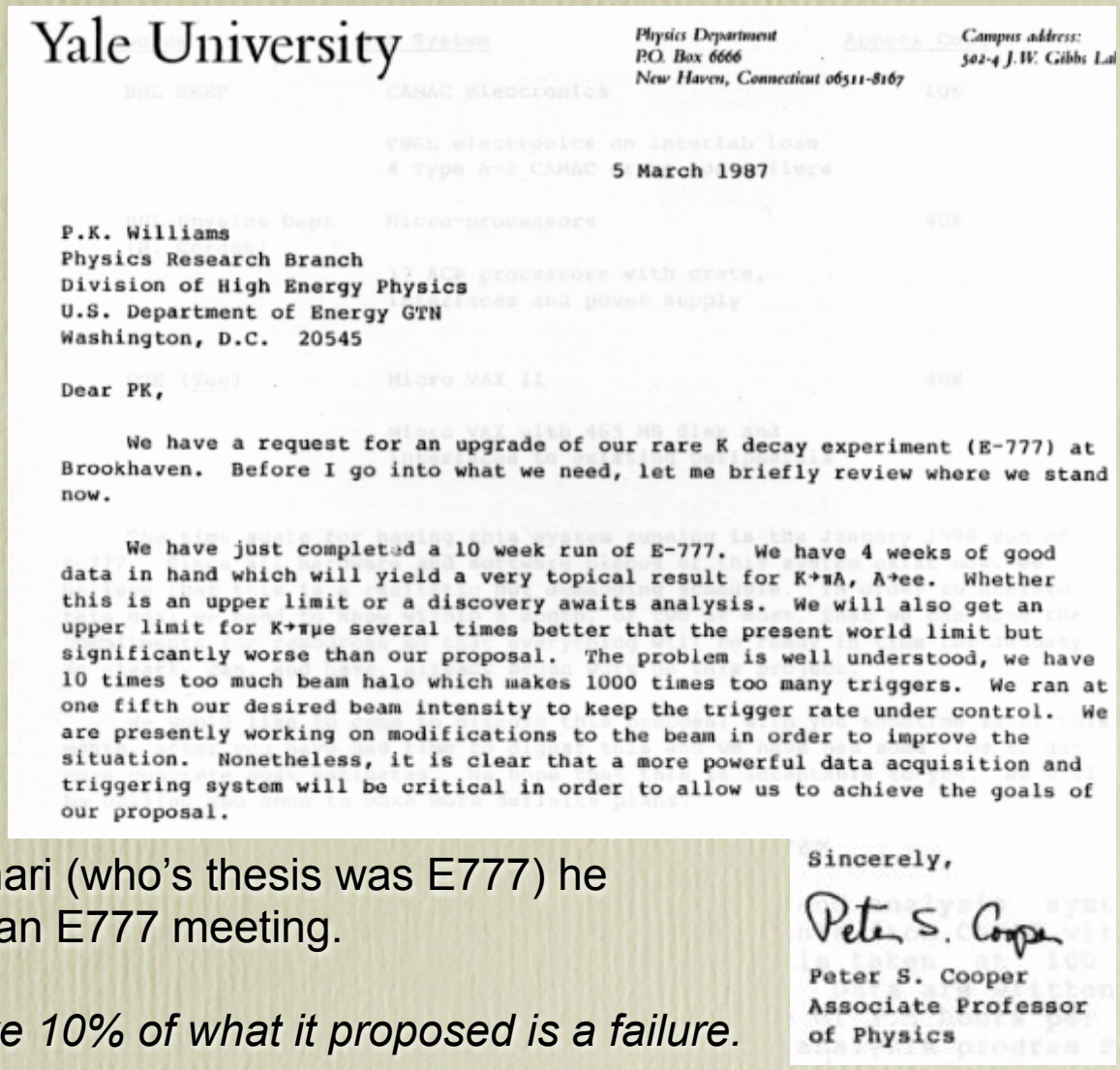

Yale University

Physics Department
P.O. Box 6666
New Haven, Connecticut 06511-8167

Campus address:
502-4 J.W. Gibbs La

5 March 1987

P.K. Williams
Physics Research Branch
Division of High Energy Physics
U.S. Department of Energy GTN
Washington, D.C. 20545

Dear PK,

We have a request for an upgrade of our rare K decay experiment (E-777) at Brookhaven. Before I go into what we need, let me briefly review where we stand now.

We have just completed a 10 week run of E-777. We have 4 weeks of good data in hand which will yield a very topical result for $K^+\pi A$, A^+ee. Whether this is an upper limit or a discovery awaits analysis. We will also get an upper limit for $K^+\pi\mu e$ several times better that the present world limit but significantly worse than our proposal. The problem is well understood, we have 10 times too much beam halo which makes 1000 times too many triggers. We ran at one fifth our desired beam intensity to keep the trigger rate under control. We are presently working on modifications to the beam in order to improve the situation. Nonetheless, it is clear that a more powerful data acquisition and triggering system will be critical in order to allow us to achieve the goals of our proposal.

Sincerely,

Peter S. Cooper

Peter S. Cooper
Associate Professor
of Physics

Every time I see Claudio Campagnari (who's thesis was E777) he reminds me of something I said in an E777 meeting.

Any experiment which can't achieve 10% of what it proposed is a failure.

The problem is that this isn't wrong. If you can't tell yourself the truth you shouldn't be trying this kind of experiment.

$K^+ \rightarrow \pi^+\mu^+e^-$ BNL 777/865 1983-2005

It got Better

Upgrades and 2nd experiment and several more runs as E865
I decamped to Fermilab so I know what happened but not how
Obviously the problems got identified and fixed

Results

$< 3.9 \times 10^{-11}$ R. Appel, *et.al.* PRL 85, 2450(2000)
$< 2.1 \times 10^{-11}$ A. Sher, *et.al.* PR D72, 012005(2005)
+ limits on $\pi^+\mu^-e^+ < 52 \times 10^{-11}$
$\pi^-\mu^+e^+ < 50 \times 10^{-11}$
$\pi^-e^+e^+ < 64 \times 10^{-11}$
$\pi^-\mu^+\mu^+ < 300 \times 10^{-11}$
$\pi^0 \rightarrow \mu^+e^- < 38 \times 10^{-11}$
$\mu^-e^+ < 340 \times 10^{-11}$

On the whole an excellent program

It only took and several tries and 23 years

Patterns

Results

- The pattern seems to be that the first data run of one of these experiments misses the goal by a factor of 10-100.

- The problems have a common theme: Rate Kills.

- Subsequent runs and / or experiments seem to get close to the original goal: assuming they happen.

- There haven't been any recent multi order of magnitude standing broad-jumps.

Ideas

- Each of these experimental programs starts with a good, hopeful brilliant, new experimental idea. Brute force doesn't work on a log scale.

- Honesty and ruthless self criticism are requirement. The most brilliant new idea still isn't good enough. Questioning whether the sun will rise tomorrow is an appropriate point of view.

- Nature does not take prisoners

Patterns

Physicists

- These experiments are each shaped by a handful of experimentalists. To name some examples, where I know them:

MEGA: Martin Cooper, Cy Hoffmann, Dick Mischke, Bob Tribble, Carl Gagliardi, Ed Hungerford, psc, ...
BNL 791/871: Stan Wojcicki, Bob Cousins, Bill Molzon, Jack Ritchie, Karl Lang, ...
BNL 777/865: MIke Zeller, psc, Nick Hadley, Julia Thompson, Aleksey Sher, ...

These list are neither complete nor completely accurate. The point is that the success, or failure, and often both, of the experiment is in the hands of a few physicists of vision and commitment, who together with their colleagues go as far as their strength and smarts will take them.

- These are programs, not experiments. They take decades. Commitment is required!
- The project plan is an anathema to the requirements of this kind of physics.
  + Consider the project plan for Columbus' first voyage.
- These are not, and I argue cannot be, *corporate physics*. I sound here like I'm deriding corporate physics: I am not. You could no more do CMS with this experimental approach than you could do NA62 ($K^+ \rightarrow \pi^+ \nu\nu$), where I'm currently engaged, in the corporate physics style. The experiment you're trying to do dictates the style required.

If you don't like these rules you shouldn't play these games.

Questions?

Having started with Rabi's question it seem fitting to end with another Rabi quote on the subject of questions*.

My mother made me a scientist without ever intending to. Every other Jewish mother in Brooklyn would ask her child after school: So? Did you learn anything today? But not my mother. "Izzy," she would say, "did you ask a good question today?" That difference — asking good questions — made me become a scientist.

For these kinds of experiments, at least, its all about asking good questions, then answering them, at many descending levels.

* So now I know where it got it from. Vernon wasn't like this at all, but Rabi could very have been my biological grandfather, being exactly the same age as my grandfathers and from exactly the same places geographically and culturally.