Introduction to CMS Trigger

Sridhara Dasu, University of Wisconsin, CMS Collaboration

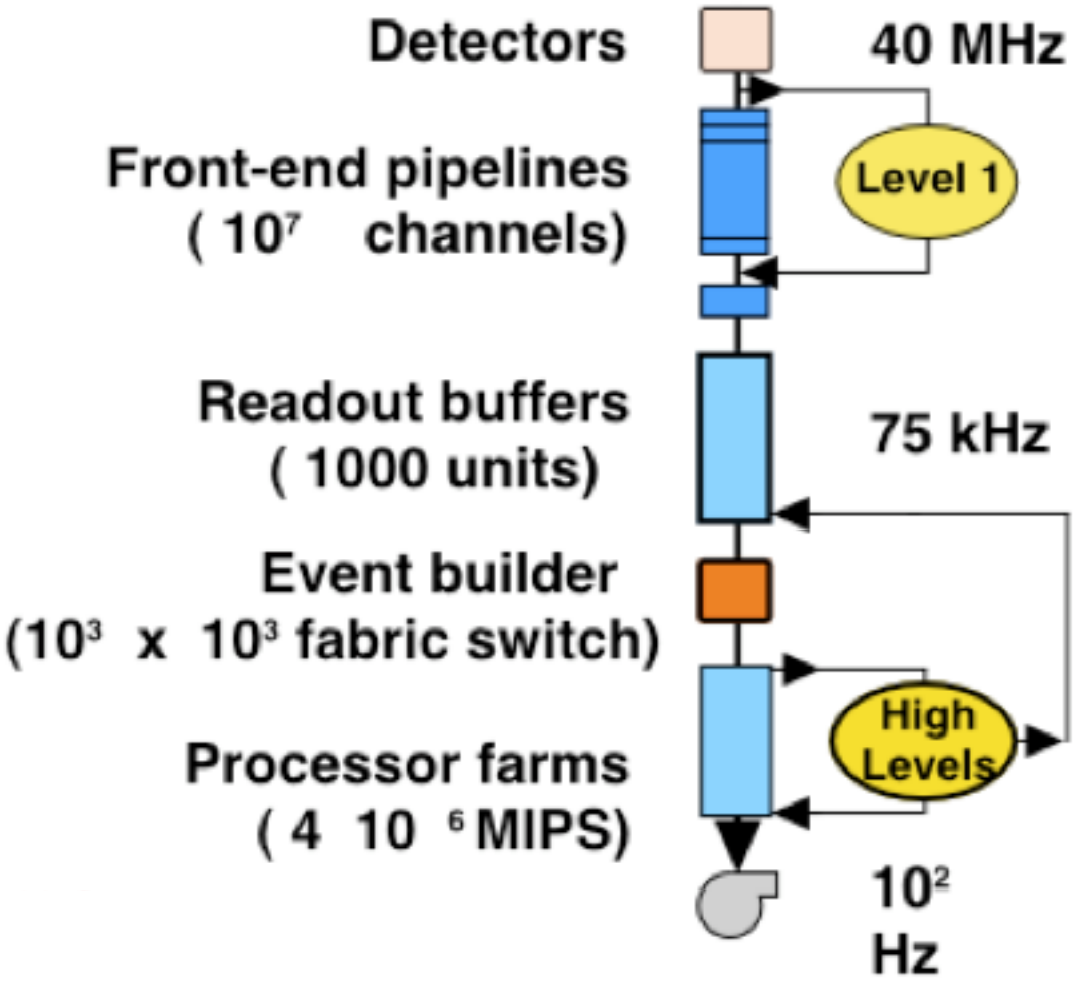

The Large Hadron Collider

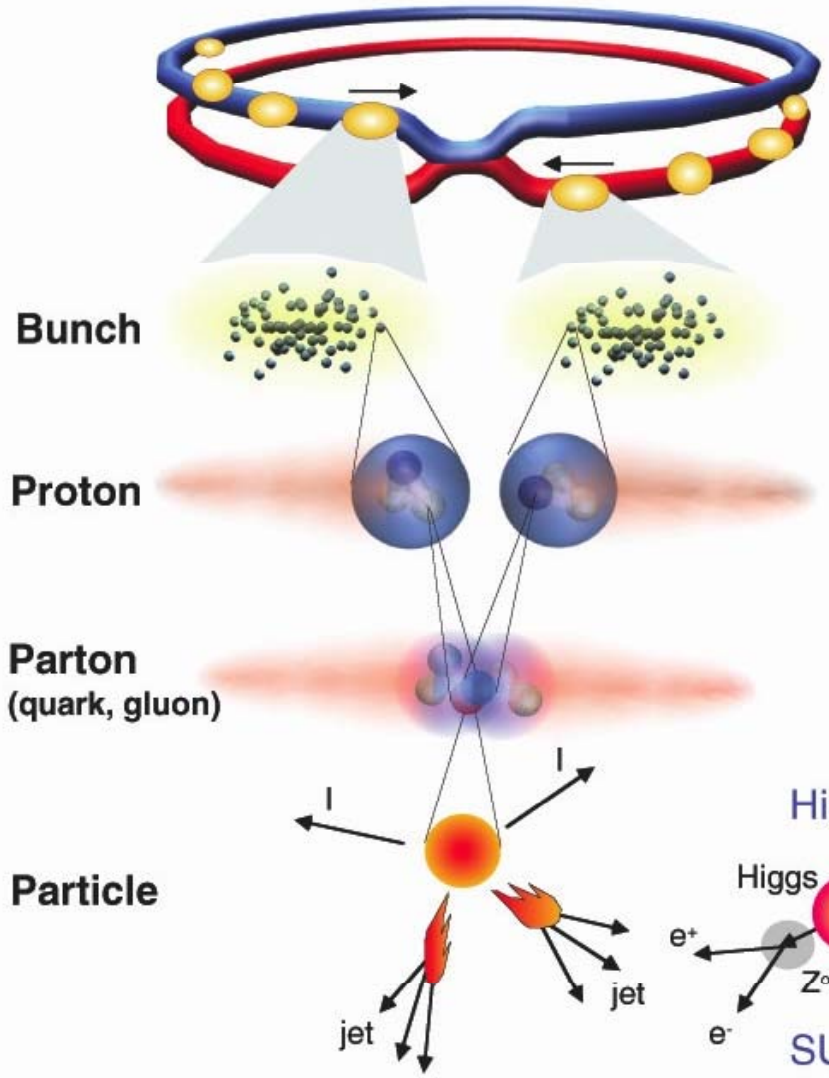

Proton-Proton	2835 bunch/beam
Protons/bunch	10^{11}
Beam energy	7 TeV (7×10^{12} eV)
Luminosity	10^{34} cm^{-2} s^{-1}
Crossing rate	40 MHz
Collisions ≈	10^{7} - 10^{9} Hz

Selection of 1 in 10,000,000,000,000

Physics in LHC Era

Trigger Challenge

- Electroweak Symmetry Breaking Scale
  - Higgs discovery and higgs sector characterization ← Low P_T γ, e, μ
  - Quark, lepton Yukawa couplings to higgs ← Low P_T B, τ jets
- New physics at TeV scale to stabilize higgs sector
  - Spectroscopy of new resonances (SUSY or otherwise) ← Multiple low P_T objects
  - Find dark matter candidate ← Missing E_T
- Multi-TeV scale physics (loop effects)
  - Indirect effects on flavor physics (mixing, FCNC, etc.)
    - B_s mixing and rare B decays ← ~ give up to dedicated experiment, LHCB
  - Lepton flavor violation
    - Rare Z and higgs decays ← Low P_T leptons
- Planck scale physics
  - Large extra dimensions to bring it closer to experiment
  - New heavy bosons
  - Blackhole production

← High P_T leptons and photons; Multi particle and jet events

Low ≅ 40 GeV

The LHC Trigger Challenge

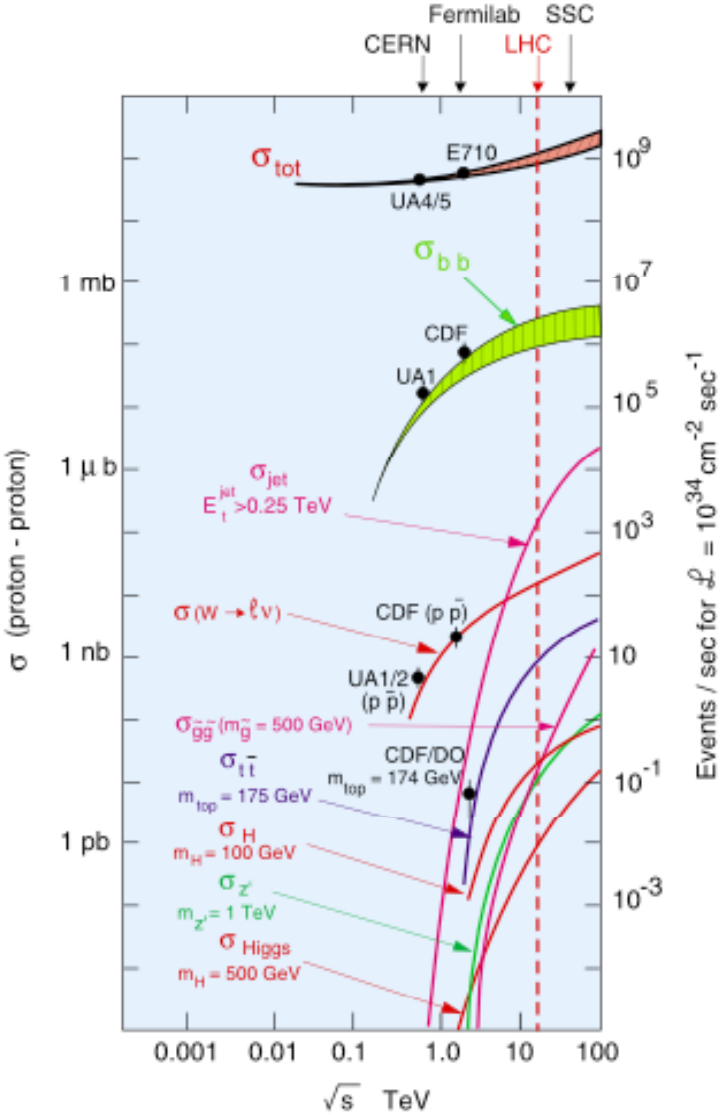

Physics at EWSB scale

- 115 < M_{higgs} < 250 GeV
- Decays to $\gamma\gamma$, WW*, ZZ*
  - 2-γ P_T~20 GeV, Lepton P_T ~ 40 GeV

TeV scale supersymmetry

- Multiple leptons, jets and LSPs (missing P_T), H_T ~ 300 GeV

QCD Background

- Jet E_T ~ 250 GeV, rate = 1 kHz
- Jet fluctuations ⇒ electron BG
- Decays of π, k, B ⇒ muon BG

Technical challenges

- 40 MHz input ⇒ fast processing
- 100 Hz output ⇒ physics selection
- 10^9 events per year ⇒ ≤10^2 higgs events

Multi Level Trigger Strategy

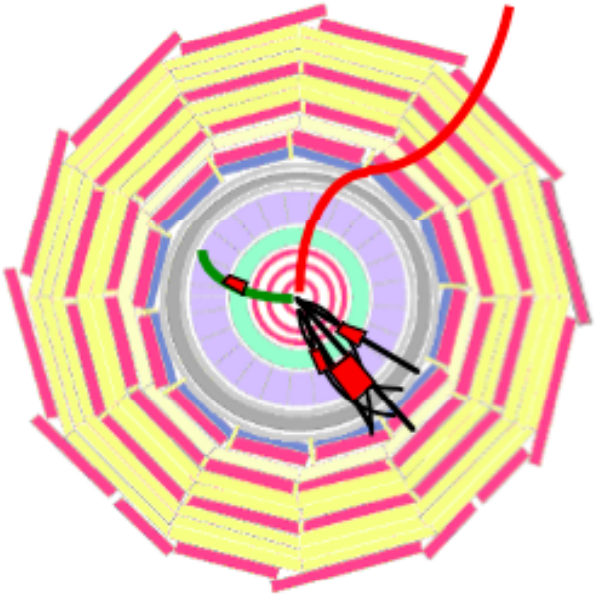

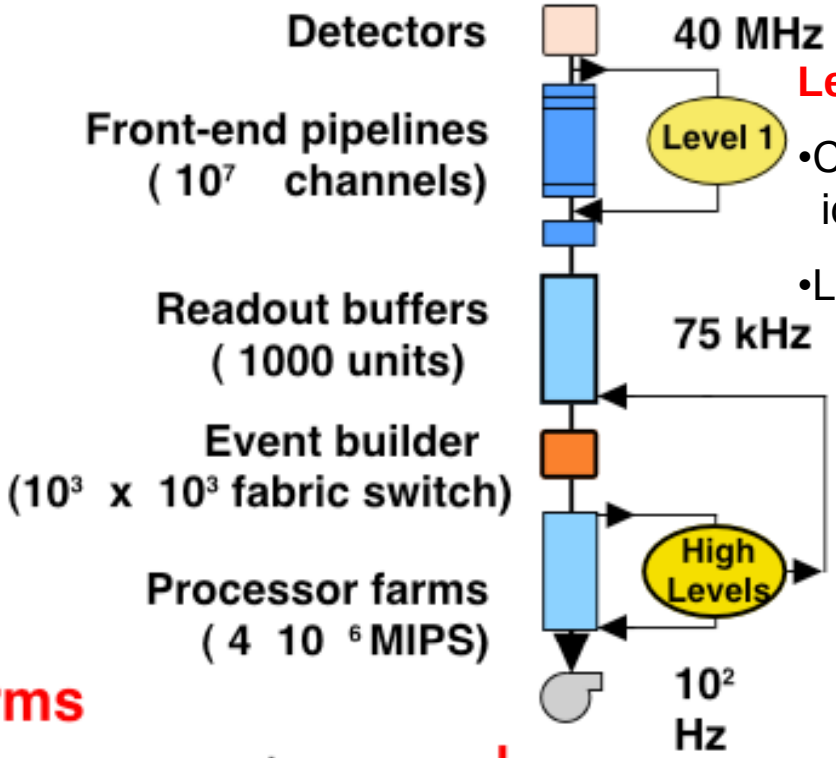

- Coarse object identification
- Limited isolation

High level triggers. CPU farms

- Finer granularity precise measurement
- Clean particle signature (π^0-γ, isolation, ...)
- Kinematics. Effective mass cuts and topology
- Track reco and matching, b,τ-jet tagging
- Full event reconstruction and analysis

Successive improvements : background event filtering, physics selection

L1T Algorithms: μ tracking

- Link local track segments (in CSC) into distinct 3D tracks (FPGA logic)
  - Reconstruction in η suppresses accelerator muons
- Measure p_T, φ, and η of the muon candidates in the non-uniform fringe field in the endcap iron (SRAM LUTs)
  - Require 25% p_T resolution for sufficient rate reduction
- Send highest quality candidates for combination with other μ detectors (similar algorithm for DT in barrel) and make final L1 trigger decision with p_T cut

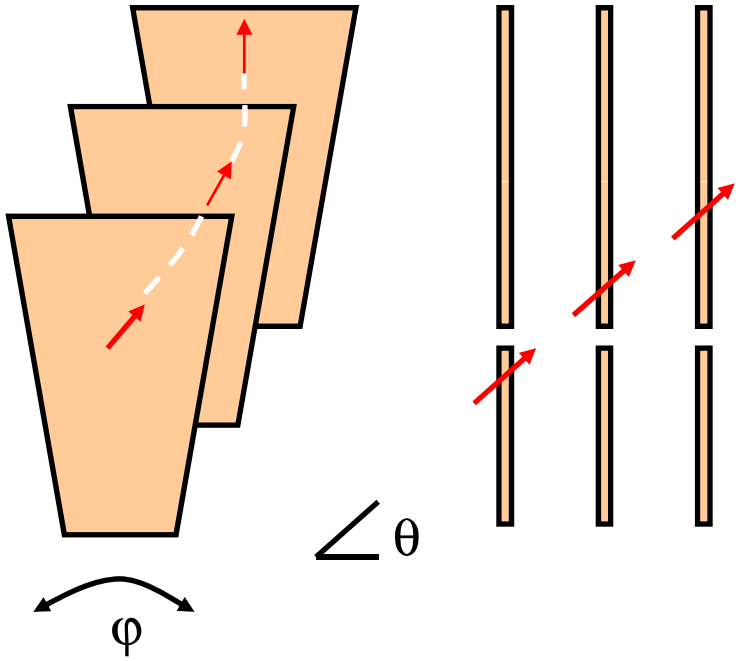

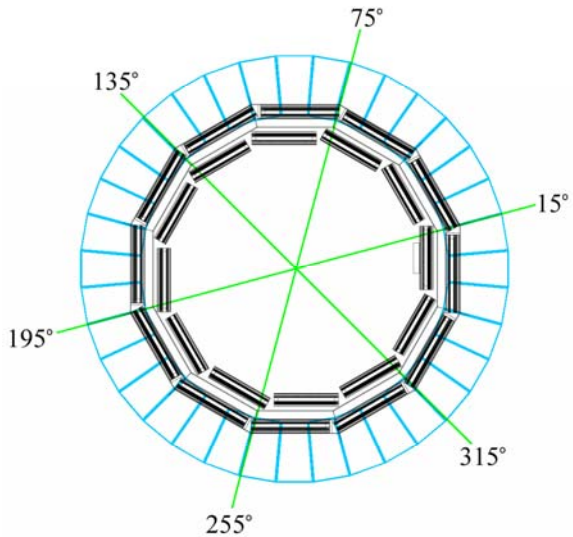

Calorimeter Trigger Geometry

Trigger towers:
$\Delta\eta = \Delta\phi = 0.087$

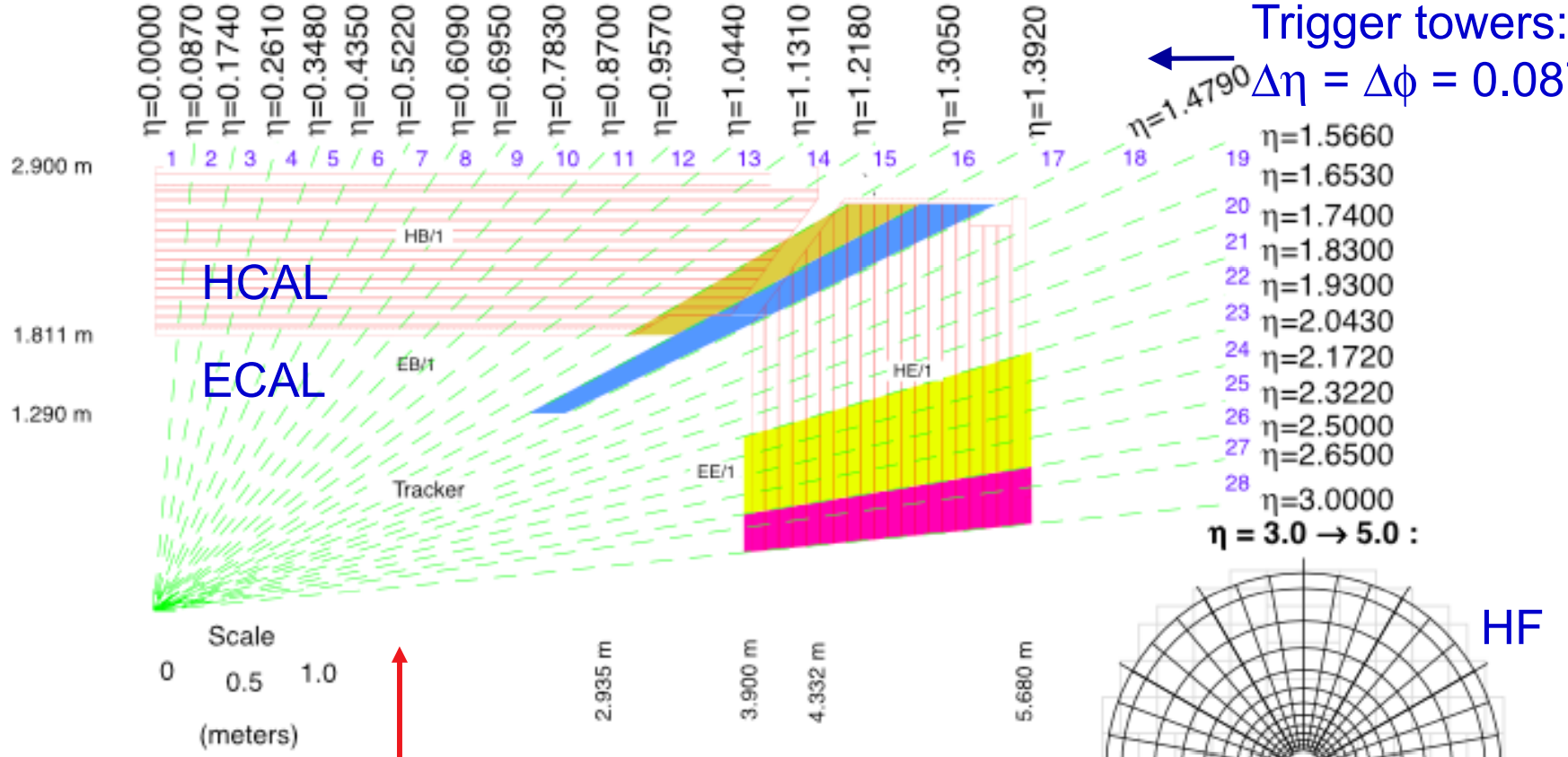

HF

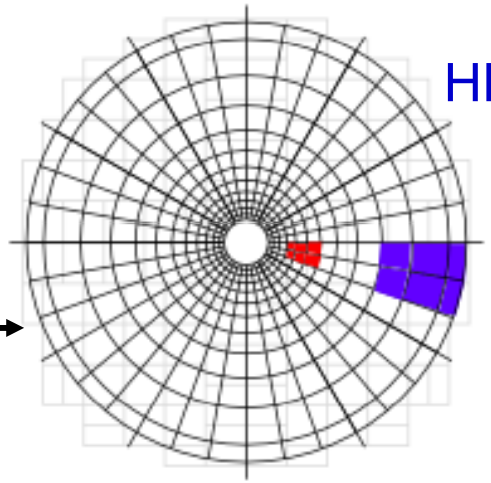

2 CMS HF Calorimeters mapping onto Trigger System Jet/Summary Card

Readout segmentation: 36ϕ × 12η × 2z × 2F/B

Trigger Tower segmentation: 18ϕ × 4η × 2F/B

EB, EE, HB, HE map to 18 RCT crates

Provide e/γ and jet, τ, E_T triggers

L1T Algorithms: e/γ

Trigger Primitive Generator

Fine grain — Flag Max of (, , ,) & Sum ET

Regional Calorimeter Trigger

E_T cut — + Max ( ) > Threshold

AND

Longitudinal cut (H/E) — / < 0.05

AND

Isolation, Hadronic & EM — < 2 GeV

AND

One of (, , ,) < 1 GeV

ELECTRON or PHOTON

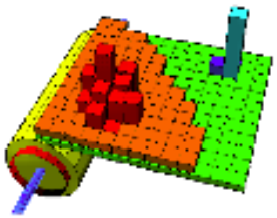

Triggers are mostly due to energetic π^0s in em-rich jets

L1T: τ / Jet Algorithm

Jets are real - however, difficult to get low p_T jets

τ-jets are mostly fake

Input from E/HCAL:
Programmable 8-bit non-linear scale
Converted to linear scale and summed to obtain 10-bit range jet/τ E_T

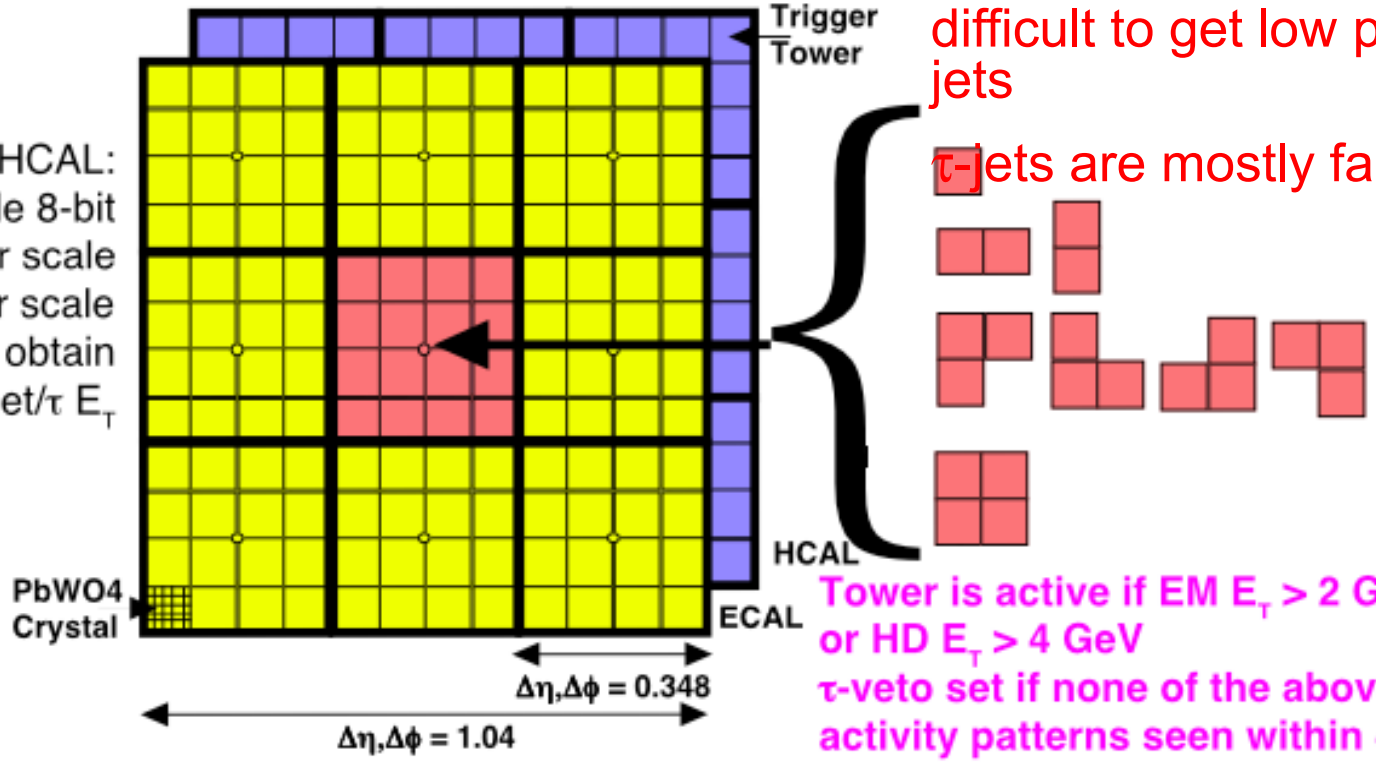

Tower is active if EM E_T > 2 GeV or HD E_T > 4 GeV
τ-veto set if none of the above activity patterns seen within 4x4

Jet or τ E_T

- 12x12 trigger tower E_T sums in 4x4 region steps with central region > others
- Larger trigger towers in HF but ~ same jet region size, 1.5 η x 1.0 φ

τ algorithm (isolated narrow energy deposits), within -2.5 < η < 2.5

- Redefine jet as τ jet if none of the nine 4x4 region τ-veto bits are on

Output

- Top 4 τ-jets and top 4 jets in central rapidity, and top 4 jets in forward rapidity

Missing / Total E_T Algorithm

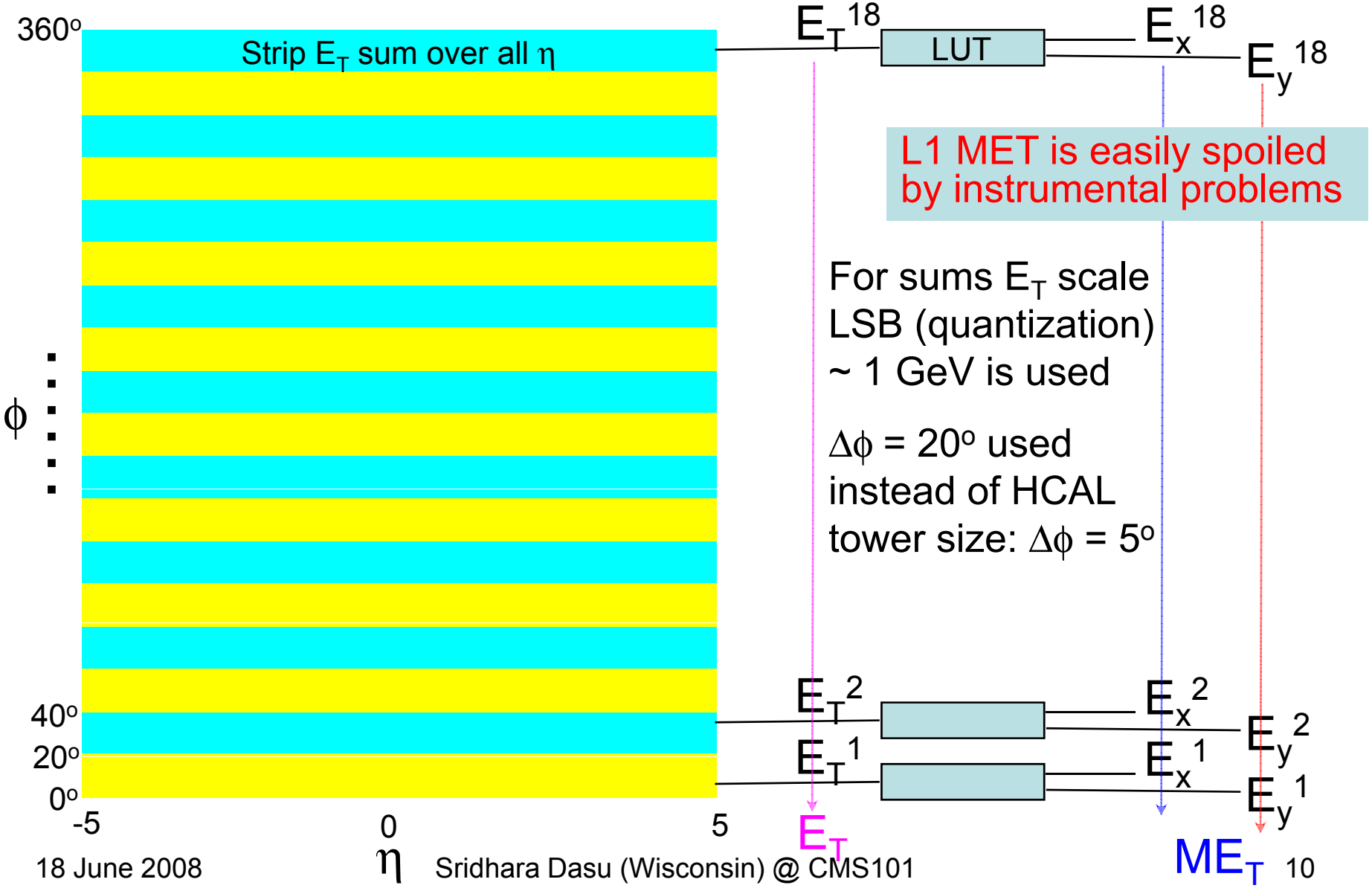

L1 MET is easily spoiled by instrumental problems

For sums E_T scale LSB (quantization) ~ 1 GeV is used

$\Delta\phi = 20^o$ used instead of HCAL tower size: $\Delta\phi = 5^o$

L1 Trigger System Production

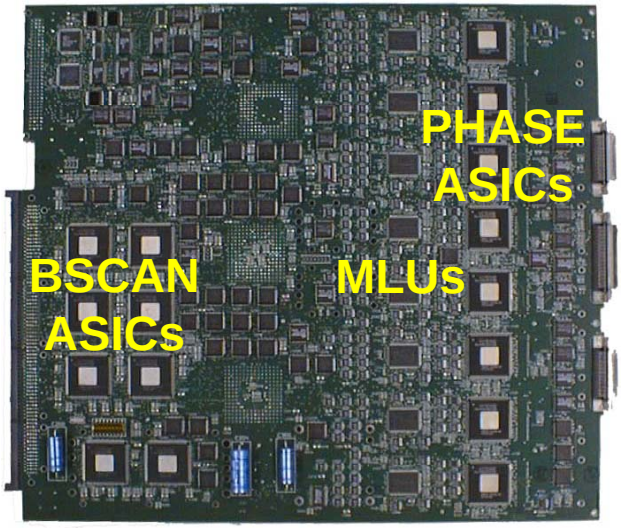

RCT Receiver card

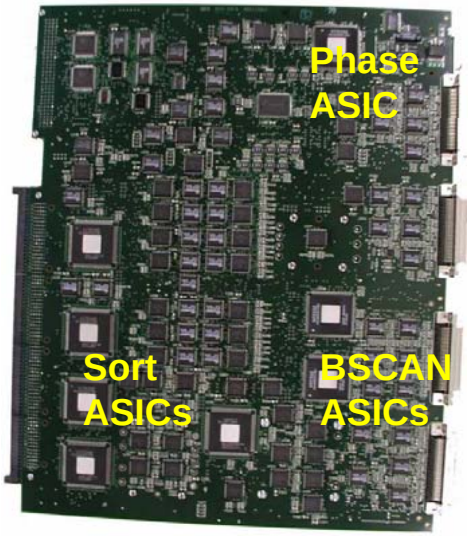

RCT Jet/Summary card

RCT Electron isolation card

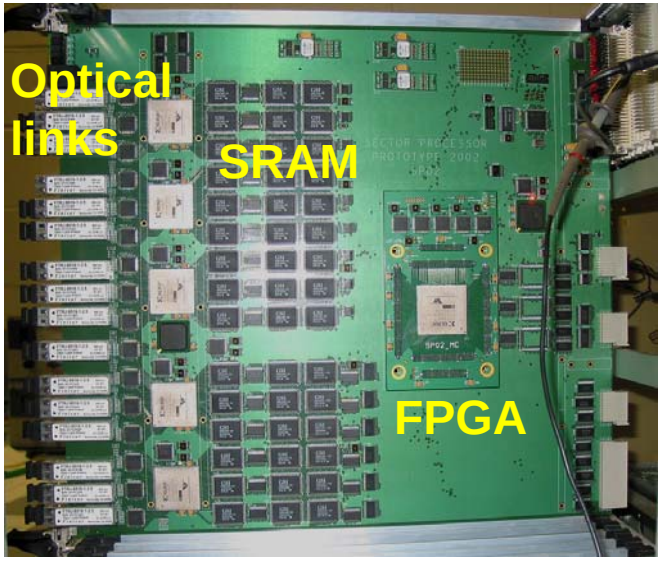

CSC Track-Finder

- **Custom ASICs**
- **Large FPGAs**
- **SRAM**
- **Gbit/s Optical links**
- **Dense boards**

All L1 Trigger Hardware is installed and is being commissioned

L1 DT trigger efficiency

Runs 43439,43553

CRUZET 1

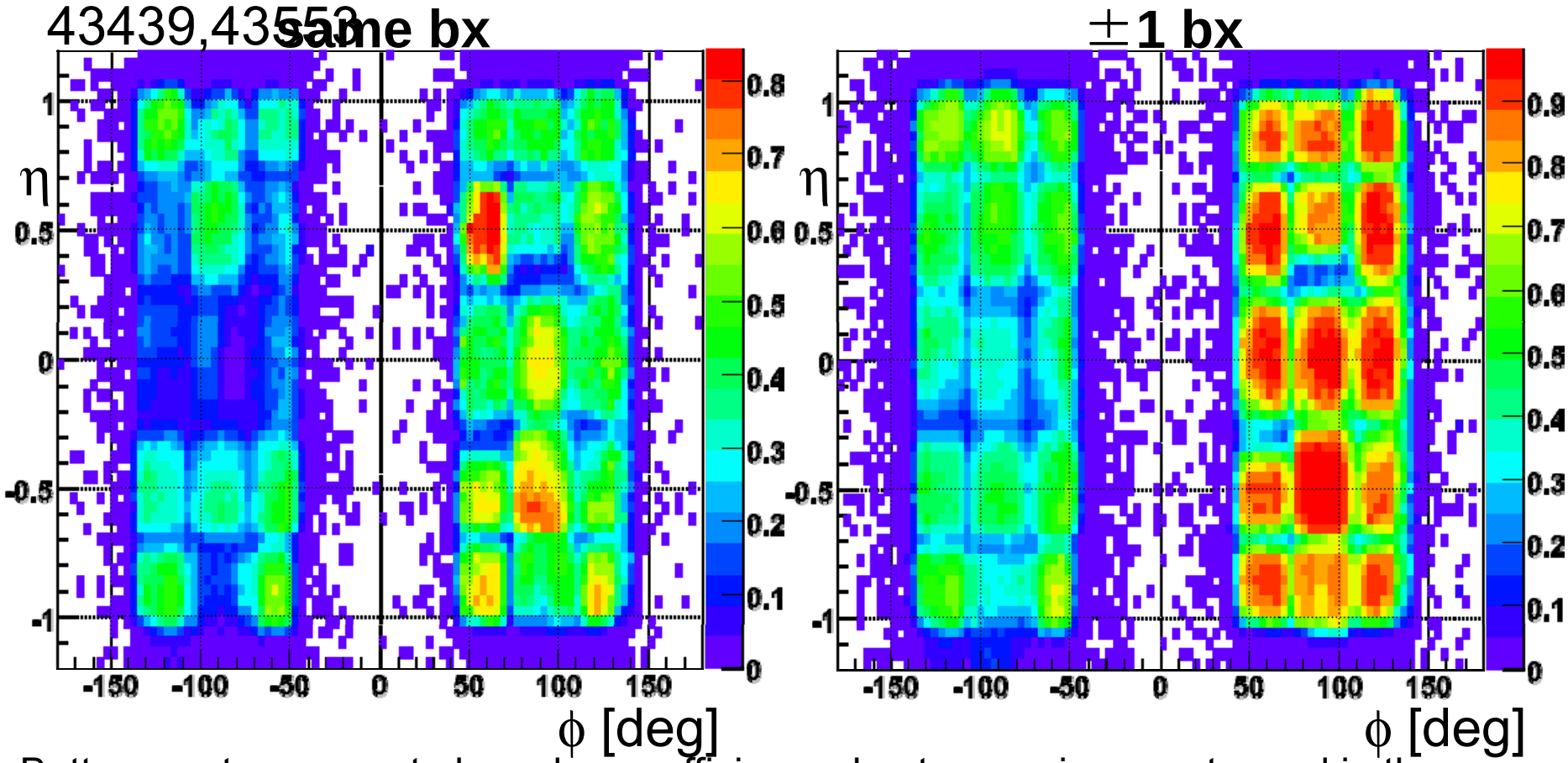

Bottom sectors seem to have lower efficiency due to cosmic rays stopped in the calo material

L1 DT trigger efficiency

Run 47011 **CRUZET 2**

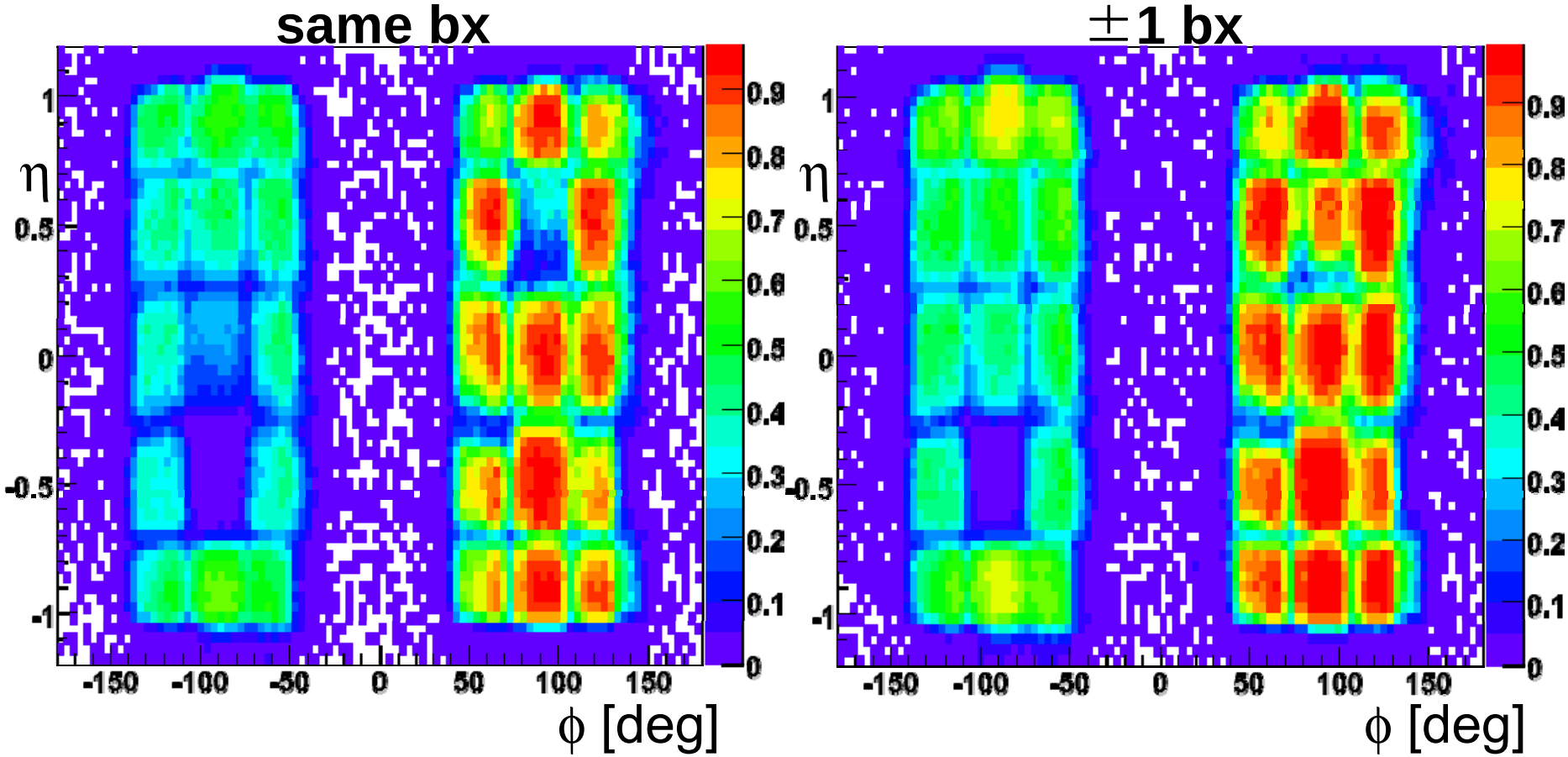

Internal DT trigger synchronization much better in CRUZET 2 as expected
Sector 10, wheel -1 missing

L1 Calorimeter Triggers

HCAL➔RCT➔GCT➔GT (tower > threshold)

– Tested in CRUZET-II

Noise Run

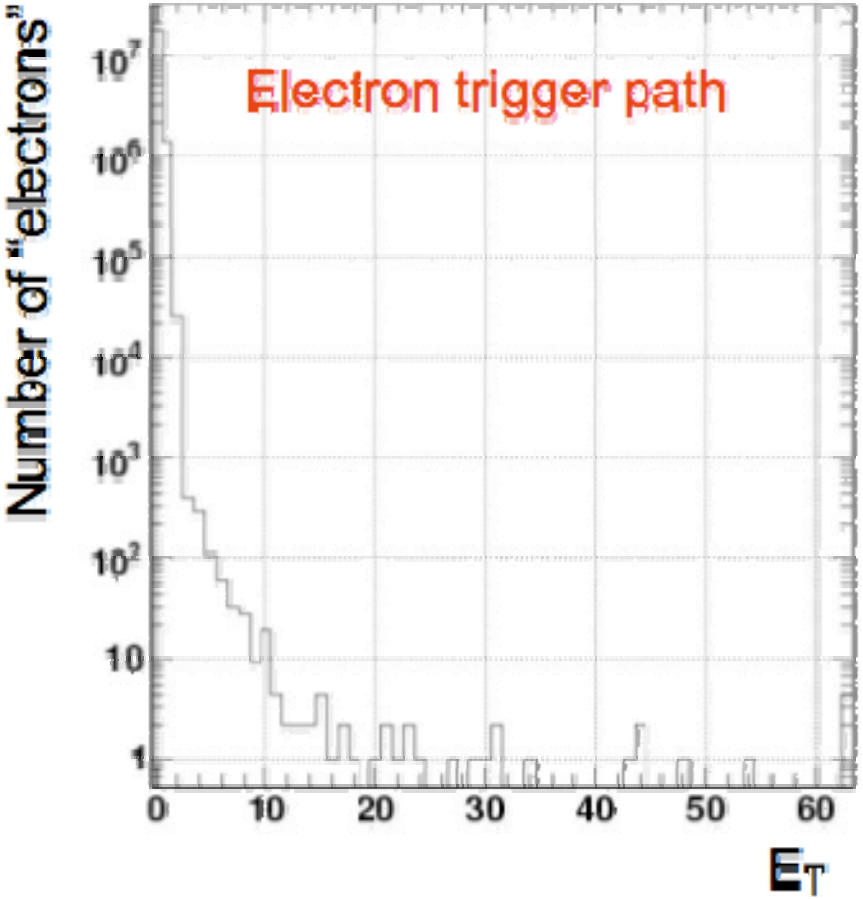

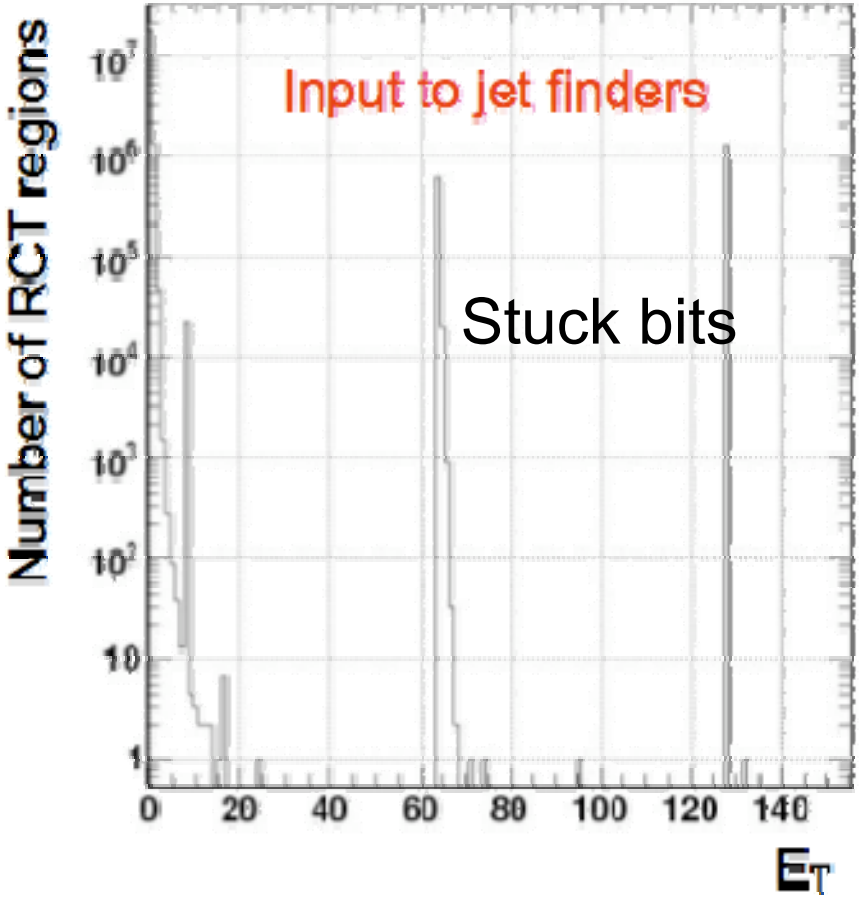

L1 Calorimeter Triggers

HCAL➔RCT➔GCT➔GT (tower > threshold)

– Tested in CRUZET-II

Noise Run

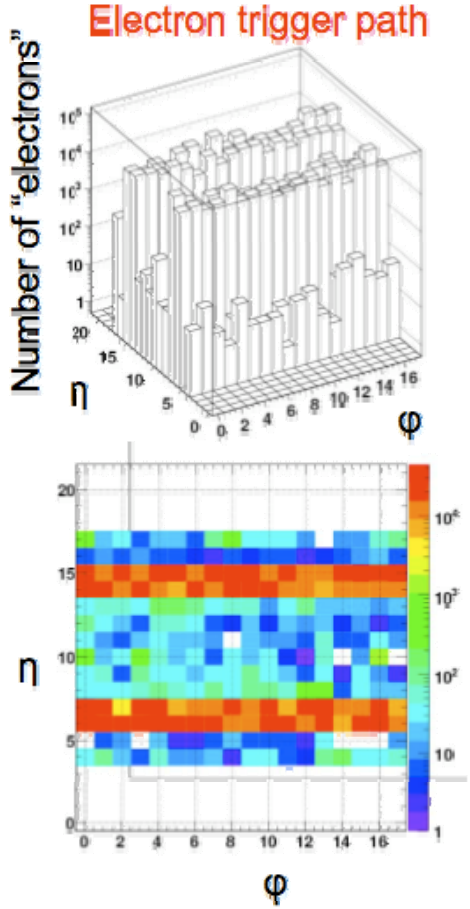

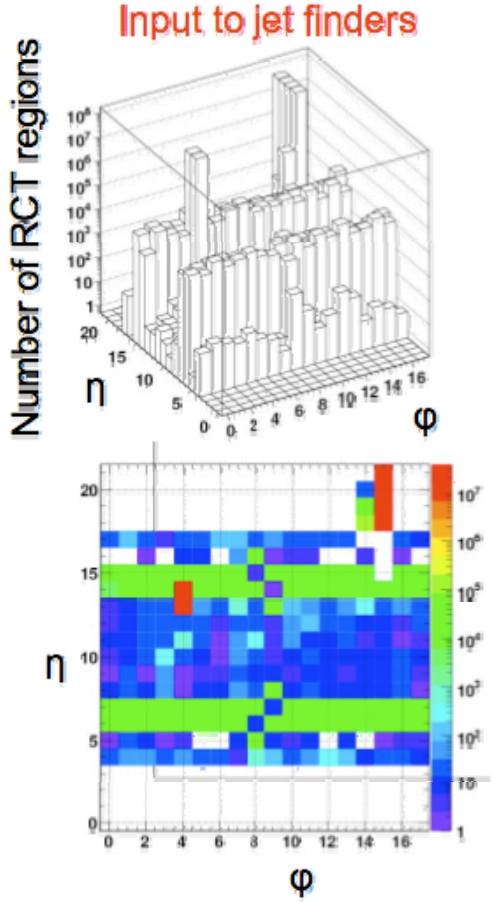

Calorimeter Triggers

HCAL➔RCT➔GCT➔GT (tower > threshold)

– Tested in CRUZET-II

Cosmics Run

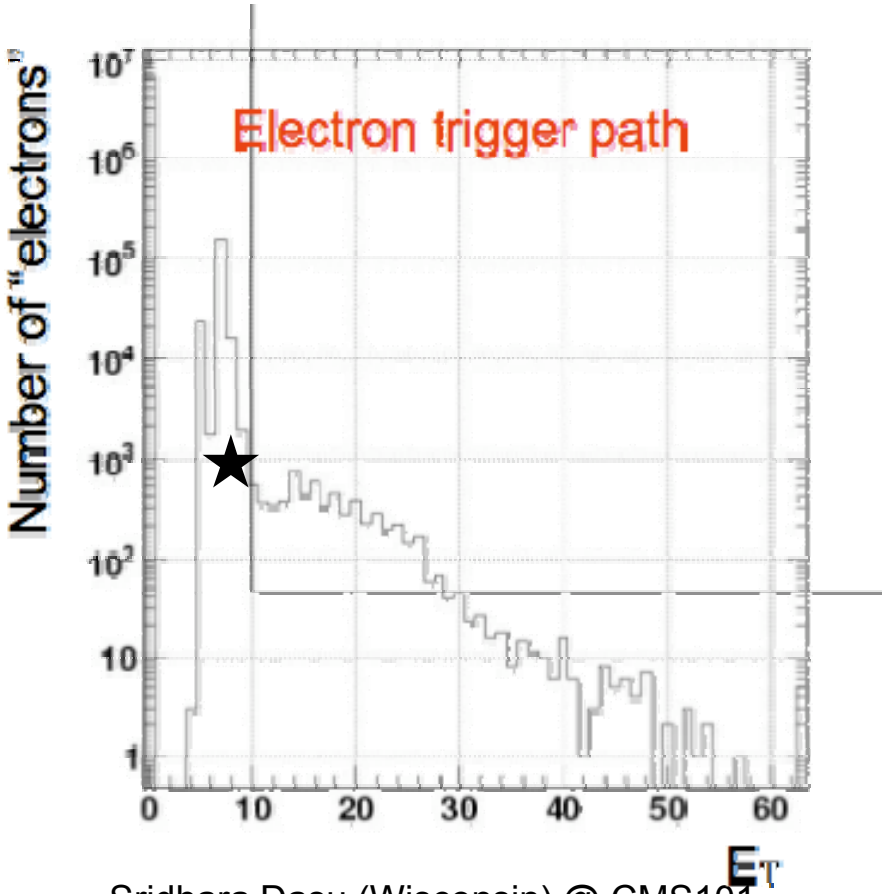

Trigger Rates

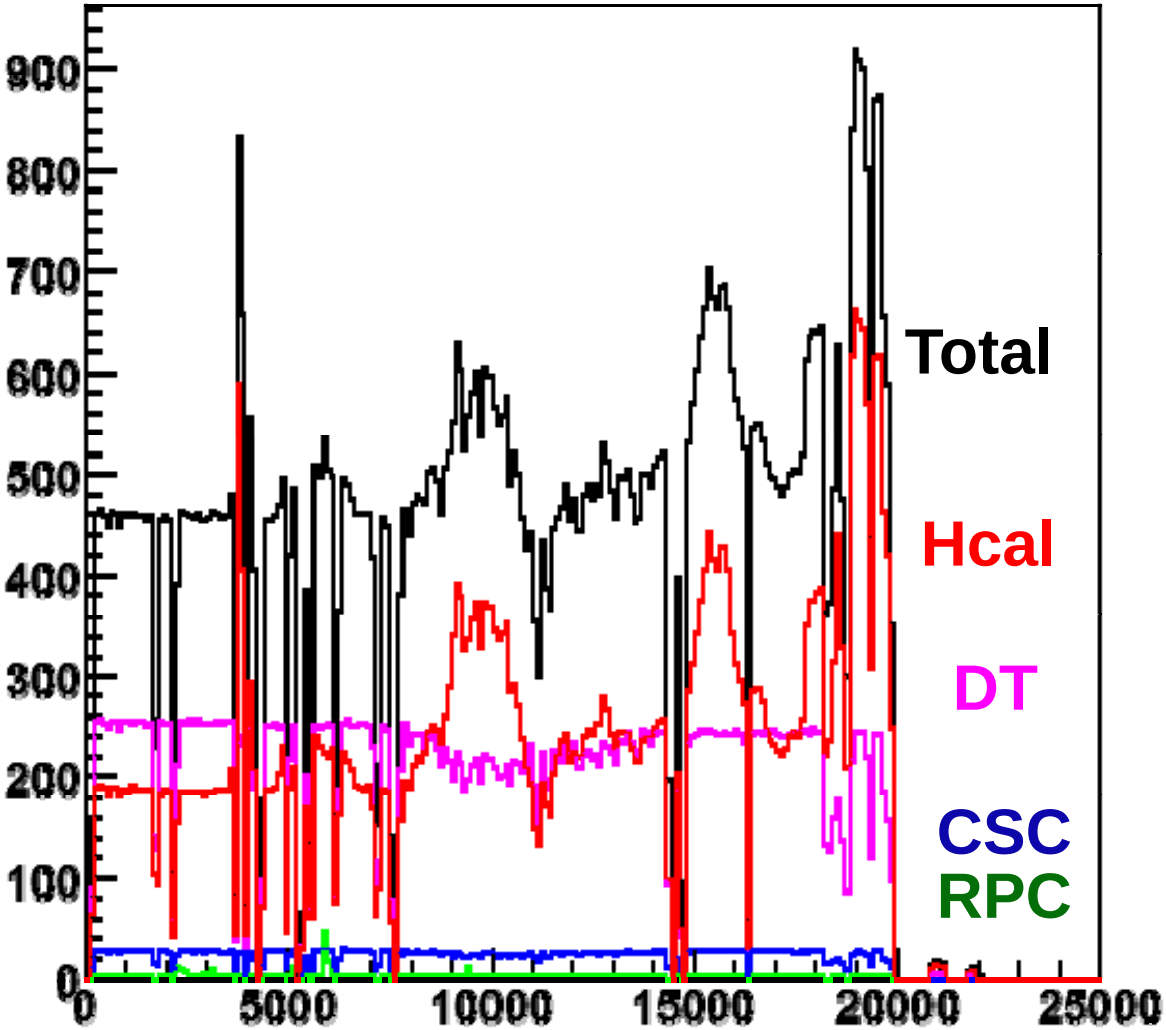

- Trigger rate during one of the CRUZET-II runs
- Not all cosmics – lots of noise!
- Muon (DT) trigger commissioning is farther along than calorimeters
- Studying correlations between DT/RPC/CSC now
- HCAL dominated by noise – but may still be acceptable for running
- Detailed studies of MET etc. begin
- ECAL also tried but not used in CRUZET-II

The High-Level Triggers

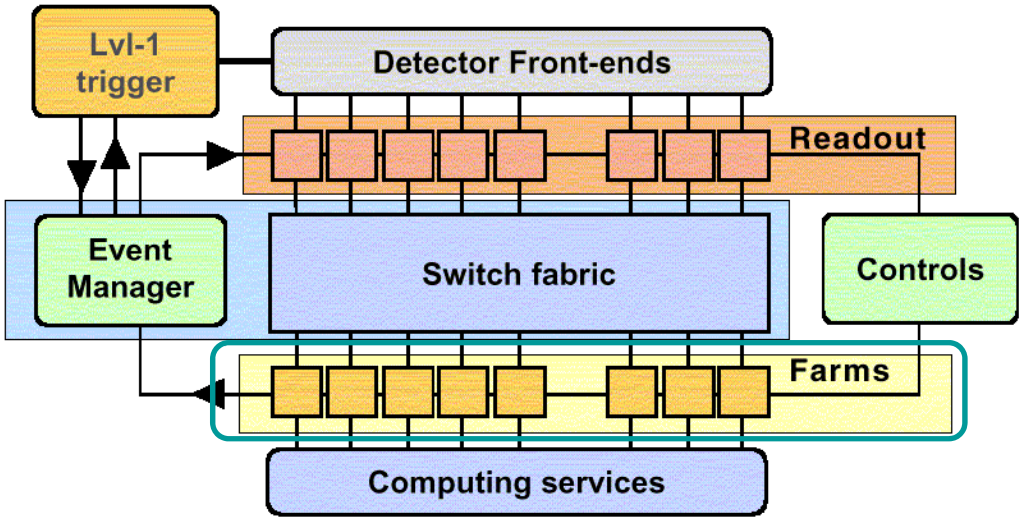

In CMS all trigger decisions beyond Level-1 are performed in a Filter Farm running ~normal CMS reconstruction software on "PCs"

- **The filter algorithms are setup in several steps**

HLT does partial event reconstruction "on demand" seeded by the L1 objects found, using full detector resolution

- **Algorithms are essentially offline quality but optimized for fast performance**

HLT Executable Structure

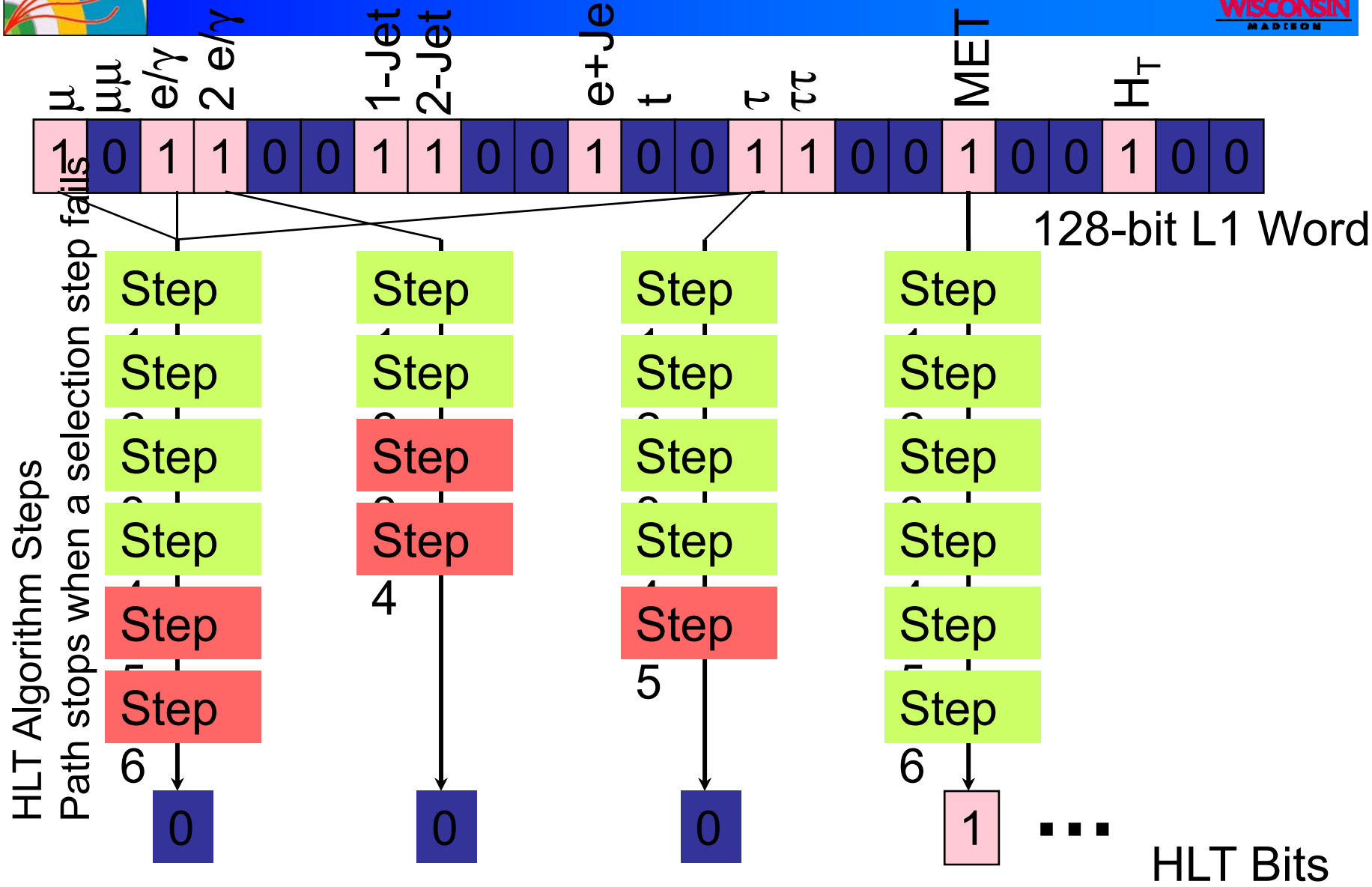

HLT e/γ Selection

- Initial steps using calorimeter ("Level-2 e/γ"):
  - Search for matching Level-1 e/γ object
    - Use 1-tower margin around 4x4-tower trigger region
  - Bremsstrahlung recovery "super-clustering"
  - Select highest E_T cluster
- Bremsstrahlung recovery:
  - Road along φ — in narrow η-window around seed
  - Collect all sub-clusters in road → "super-cluster"

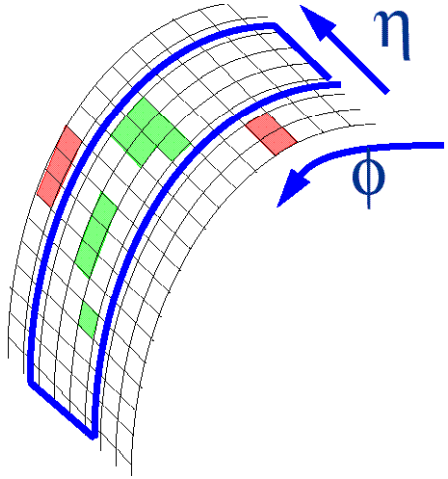

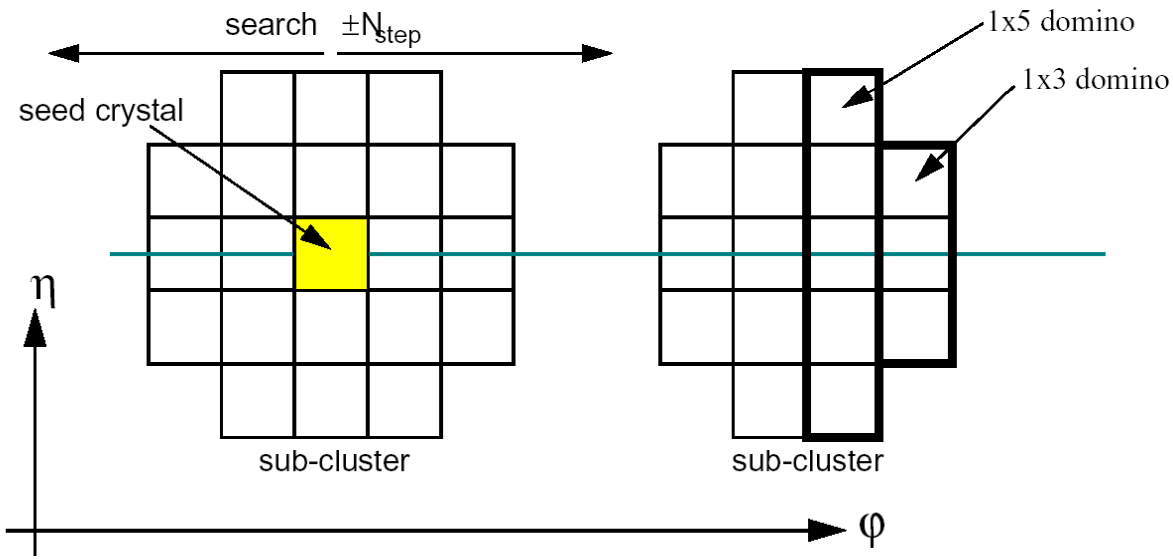

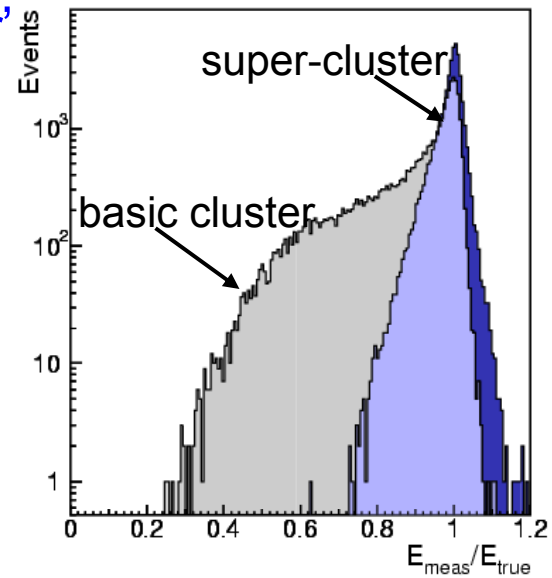

HLT τ-jet tagging

τ-jet ($E_t^{\tau\text{-jet}} > 60$ GeV) identification (mainly) in the tracker:

Hard track, $p_t^{max} > 40$ GeV, within $\Delta R < 0.1$ around calorimeter jet axis

Isolation: no tracks, $p_t > 1$GeV, within $0.03 < \Delta R < 0.4$ around the hard track

For 3-prong selection 2 more tracks in the signal cone $\Delta r < 0.03$

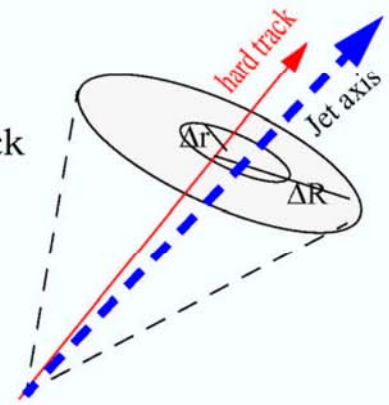

QCD jet rejection from isolation and hard track cuts

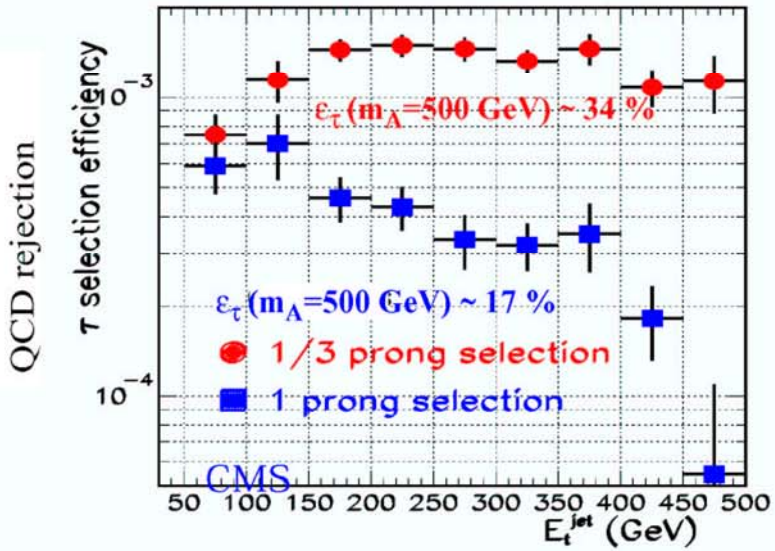

Final steps in HLT paths involve tracking which is more time consuming

Reconstruct tracks only in the region of interest around "Level-2" tagged objects

Further reduction by ~ 5 expected for 3-prong QCD jets from τ vertex reconstruction (CMS full simulation)

HLT algorithm design

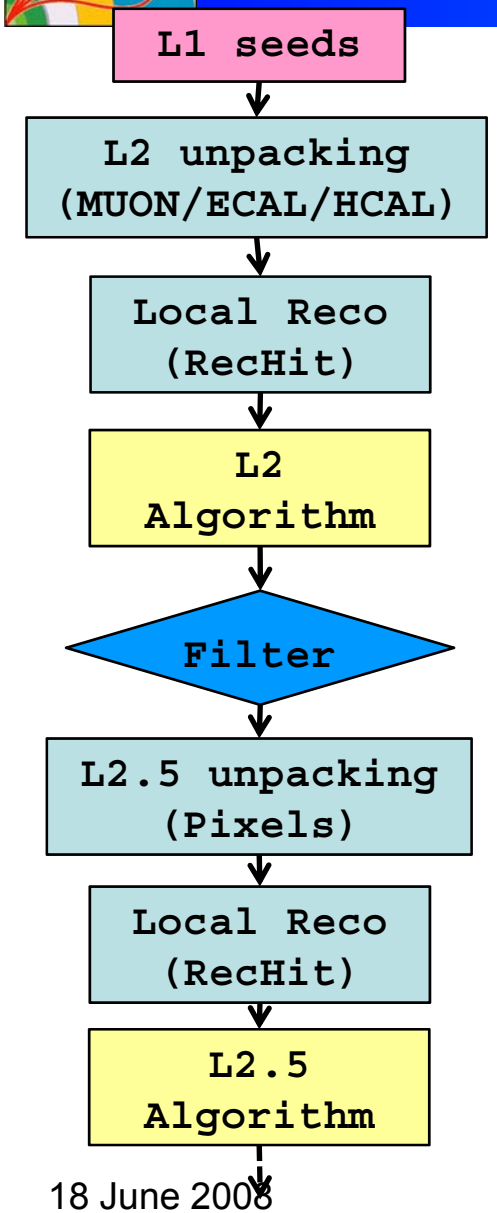

"Global" vs. "Regional":

- All algorithms (except for Jets) regional by now
  - Seeded by previous levels (L1, L2, L2.5)
- Can benefit significantly by doing regional data-unpacking and local reconstruction across HLT
- Have implemented regional ECAL unpacking/RecHit for Egamma and Muon trigger paths
- Started planning (& development) of regional unpacking across rest of detectors, HLT paths

"Local": using one sub-detector only
"Regional": using small (η, φ) region

HLT Framework Design & Implementation:
Martin Gruenewald

Getting Ready for LHC

Goal: be prepared for luminosities up to 1E32

- Using two reference values (2E30, 2E31) for CSA08 exercise
- At lower luminosities take lots of minimum bias and some zero bias for detector debugging using towers over threshold in calorimeter

Parameters			Beam levels		Rates in 1 and 5		
k_b	N	β^* IP1,5 (m)	I_{beam} proton	E_{beam} (MJ)	Lumi ($cm^{-2}s^{-1}$)	Events/ crossing	Min bias rates
1	10^{10}	11	$1\ 10^{10}$	10^{-2}	$1.6\ 10^{27}$	<< 1	90 Hz in ~10^4 Xing
43	10^{10}	11	$4.3\ 10^{11}$	0.5	$7.0\ 10^{28}$	<< 1	4 KHz in $5\ 10^5$ Xing
43	$4\ 10^{10}$	11	$1.7\ 10^{12}$	2	$1.1\ 10^{30}$	<< 1	23 KHz in $5\ 10^5$ Xing
43	$4\ 10^{10}$	2	$1.7\ 10^{12}$	2	$6.1\ 10^{30}$	0.76	200 KHz in $5\ 10^5$ Xing
156	$4\ 10^{10}$	2	$6.2\ 10^{12}$	7	$2.2\ 10^{31}$	0.76	800 KHz in 10^7 Xing
156	$9\ 10^{10}$	2	$1.4\ 10^{13}$	16	$1.1\ 10^{32}$	3.9	4 MHz in 10^7 Xing

First Look at HLT for 4×10^{29}

Trigger object	*L1 Seed*	*HLT thresh [GeV]*	*Prescale*	*HLT Rate [Hz]*
Jet(MET)	L1_SingleJet15 L1_SingleJet30 L1_ETM30	30 60 30	10 1 1	15 55 15
Electron	L1_SingleEG5	5	1	5
Photon	L1_SingleEG5	10	1	33
Muon	OR of All MuSeeds	none	1	34
ALL				140

Large minimum bias and zero bias trigger events for debuggir

2E30 / 2E31 Trigger Menu

- Muons: *Lowest-threshold unprescaled triggers*
  - Single-muons above 5 GeV (11 GeV)
  - Double-muons above 3 GeV (effective kinematic limit)
- Egamma:
  - Single-relaxed electrons above 8 GeV (12 GeV)
  - Double-relaxed electrons above 5 GeV (10 GeV)
  - Single-relaxed photons above 15 GeV (25 GeV)
  - Single-photons above 10 GeV with tracker-isolation (20 GeV)
- JetMET:
  - Single-jets above 110 GeV (180 GeV)
  - MET above 50 GeV (65 GeV)
- Plus:
  - Prescaled triggers for lower energies/momenta (all flavors)
  - Few Hz of minimum bias

HLT CPU performance: 1E32

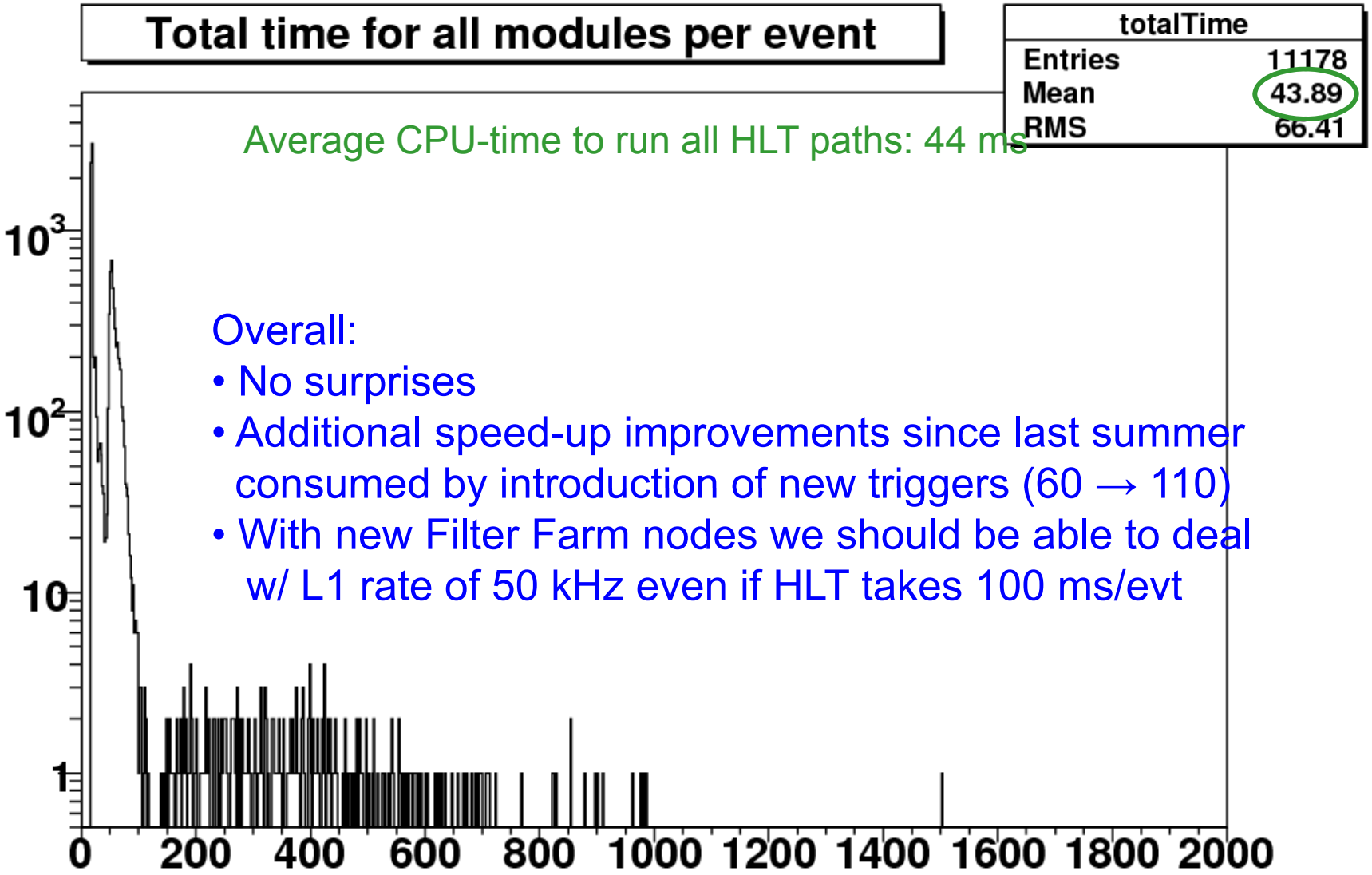

Overall:

- No surprises
- Additional speed-up improvements since last summer consumed by introduction of new triggers (60 → 110)
- With new Filter Farm nodes we should be able to deal w/ L1 rate of 50 kHz even if HLT takes 100 ms/evt

2007 HLT Exercise

HLT Timing is influenced by

- Trigger menu (L1T & HLT)
  - Determined by physics priorities
  - Instantaneous luminosity
    - Chose to make a menu for 10^{32} cm^{-2} s^{-1}
    - Maximum luminosity in 2008
- Input L1Trigger rate
  - Parameters of various L1T algorithms, e.g., H/E
  - Limited by bandwidth $\otimes$ safety factor to 17 kHz
- HLTrigger algorithms
  - Standard trigger paths at HLT seeded by L1 trigger bits
  - Order of modules and filters in a path
  - Parameters of the modules and filters

We settled on one setting for the 2007 HLT Exercise

L1T Menu: Single + Double

L1 Trigger	Threshold (GeV)	Prescale	Rate (kHz)
A_SingleMu3	3	1000	0.01 ± 0.00
A_SingleMu5	5	1000	0.00 ± 0.00
A_SingleMu7	7	1	1.11 ± 0.04
A_SingleMu10	10	1	0.47 ± 0.03
A_SingleMu14	14	1	0.18 ± 0.02
A_SingleMu20	20	1	0.09 ± 0.01
A_SingleMu25	25	1	0.06 ± 0.01
A_SingleIsoEG5	5	10000	0.00 ± 0.00
A_SingleIsoEG8	8	1000	0.01 ± 0.00
A_SingleIsoEG10	10	100	0.04 ± 0.01
A_SingleIsoEG12	12	1	2.47 ± 0.06
A_SingleIsoEG15	15	1	1.10 ± 0.04
A_SingleIsoEG20	20	1	0.32 ± 0.02
A_SingleIsoEG25	25	1	0.14 ± 0.01
A_SingleEG5	5	10000	0.00 ± 0.00
A_SingleEG8	8	1000	0.01 ± 0.00
A_SingleEG10	10	100	0.04 ± 0.01
A_SingleEG12	12	100	0.03 ± 0.01
A_SingleEG15	15	1	1.51 ± 0.05
A_SingleEG20	20	1	0.52 ± 0.03
A_SingleEG25	25	1	0.25 ± 0.02
A_SingleJet70	70	100	0.02 ± 0.01
A_SingleJet100	100	1	0.43 ± 0.02
A_SingleJet150	150	1	0.07 ± 0.01

Continued on next page ...

L1 Trigger	Threshold (GeV)	Prescale	Rate (kHz)
A_SingleJet200	200	1	0.02 ± 0.01
A_SingleTauJet40	40	1000	0.02 ± 0.01
A_SingleTauJet80	80	1	0.68 ± 0.03
A_SingleTauJet100	100	1	0.20 ± 0.02
A_HTT250	250	1	2.56 ± 0.06
A_HTT300	300	1	0.65 ± 0.03
A_HTT400	400	1	0.08 ± 0.01
A_HTT500	500	1	0.02 ± 0.00
A_ETM20	20	10000	0.00 ± 0.00
A_ETM30	30	1	5.69 ± 0.09
A_ETM40	40	1	0.40 ± 0.02
A_ETM50	50	1	0.05 ± 0.01
A_ETM60	60	1	0.01 ± 0.00
A_DoubleMu3	3	1	0.28 ± 0.02
A_DoubleIsoEG8	8	1	0.28 ± 0.02
A_DoubleIsoEG10	10	1	0.08 ± 0.01
A_DoubleEG5	5	10000	0.00 ± 0.00
A_DoubleEG10	10	1	0.19 ± 0.02
A_DoubleEG15	15	1	0.05 ± 0.01
A_DoubleJet70	70	1	0.58 ± 0.03
A_DoubleJet100	100	1	0.11 ± 0.01
A_DoubleTauJet20	20	1000	0.02 ± 0.01
A_DoubleTauJet30	30	100	0.08 ± 0.01
A_DoubleTauJet40	40	1	2.36 ± 0.06

L1TEmulator Developers +
Werner Sun, SD, Pedram Bargassa

L1T Menu : Mixed

L1 Trigger	Threshold (GeV)	Prescale	Rate (kHz)
A_Mu3_IsoEG5	3,5	1	0.95 ± 0.04
A_Mu5_IsoEG10	5,10	1	0.04 ± 0.01
A_Mu3_EG12	3,12	1	0.09 ± 0.01
A_Mu3_Jet15	3,15	20	0.30 ± 0.02
A_Mu5_Jet15	5,15	1	1.62 ± 0.05
A_Mu3_Jet70	3,70	1	0.10 ± 0.01
A_Mu5_Jet20	5,20	1	1.18 ± 0.04
A_Mu5_TauJet20	5,20	1	0.66 ± 0.03
A_Mu5_TauJet30	5,30	1	0.38 ± 0.02
A_IsoEG10_Jet15	10,15	20	0.15 ± 0.01
A_IsoEG10_Jet30	10,30	1	1.95 ± 0.05
A_IsoEG10_Jet20	10,20	1	3.04 ± 0.06
A_IsoEG10_Jet70	10,70	1	0.26 ± 0.02
A_IsoEG10_TauJet20	10,20	1	1.95 ± 0.05
A_IsoEG10_TauJet30	10,30	1	1.33 ± 0.04
A_TauJet30_ETM30	30,30	1	1.96 ± 0.05
A_TauJet30_ETM40	30,40	1	0.26 ± 0.02
A_TripleMu3	3	1	$0.01 \perp 0.00$
A_QuadJet30	30	1	0.58 ± 0.03
Continued on next page ...			

L1 Trigger	Threshold (GeV)	Prescale	Rate (kHz)
A_MinBias_HTT10	10	large	0.40 ± 0.00
A_ZeroBias	0	large	0.40 ± 0.00
Total L1 Trigger Rate (kHz)			16.67 ± 0.15

Table 9.1: Trigger table showing L1 rates at chosen thresholds for $\mathcal{L} = 10^{32}\ \mathrm{cm}^{-2}\ \mathrm{s}^{-1}$.

L1T Menu

- Optimized to fit in the budget
  - μ and e/γ thresholds yield good W, Z efficiencies, but not τ
- Jet thresholds low enough to cover Tevatron range well
- MET only L1T used at HLT in combination with jets
- Double and mixed triggers for specific physics channels added

L1TEmulator Developers +
Werner Sun, SD, Pedram Bargassa

HLT Menu : μ + X

HLT path	L1 condition	Thresholds (GeV)	HLT Rate (Hz)
Single Isolated μ	A_SingleMu7	11	21.4 ± 2.2
Single Relaxed μ	A_SingleMu7	16	23.3 ± 1.5
Double Relaxed μ	A_DoubleMu3	$(3,3)$	13.27 ± 1.5
$J/\psi \to \mu\mu$	A_DoubleMu3	$(3,3)$ $M_{\mu\mu} \in [2.9, 3.3]$	2.2 ± 0.8
$\Upsilon \to \mu\mu$	A_DoubleMu3	$(3,3)$ $M_{\mu\mu} \in [8, 12]$	2.3 ± 0.5
$Z \to \mu\mu$	A_DoubleMu3	$(7,7)$ $M_{\mu\mu} \in [80, 100]$	0.6 ± 0.0
Triple Relaxed μ	A_TripleMu3	$(3,3,3)$	0.1 ± 0.0
Same-sign double μ	A_DoubleMu3	$(3,3)$	6.6 ± 1.2
μ-based b-tag 1-jet Prescale 20	A_Mu5_Jet15	20 $\Delta R(\mu, j) > 0.4$	4.0 ± 0.1
μ-based b-tag 2-jets	A_Mu5_Jet15	120, $p_T^{\rm rel}(\mu) > 0.7$ GeV $\Delta R(\mu, j) > 0.4$	0.5 ± 0.0
μ-based b-tag 3-jets	A_Mu5_Jet15	70, $p_T^{\rm rel}(\mu) > 0.7$ GeV $\Delta R(\mu, j) > 0.4$	0.3 ± 0.0
μ-based b-tag 4-jets	A_Mu5_Jet15	40, $p_T^{\rm rel}(\mu) > 0.7$ GeV $\Delta R(\mu, j) > 0.4$	0.4 ± 0.0
μ-based b-tag H_T	A_HTT250	300, $p_T^{\rm rel}(\mu) > 0.7$ GeV $\Delta R(\mu, j) > 0.4$	2.6 ± 0.0
$b \to J/\psi(\mu\mu)$	A_DoubleMu3	$(4,4)$ $M_{\mu\mu} \in [2.95, 3.25]$	0.8 ± 0.1
$\mu + b$-jet	A_Mu5_Jet15	$(7, 35)$	0.1 ± 0.0
$\mu + \mu$-based b-jet	A_Mu5_Jet15	$(7, 20)$	0.1 ± 0.1
$\mu +$ jet	A_Mu5_Jet15	$(7, 40)$	6.4 ± 0.7
$e + \mu$	$\star$	$(8, 7)$	0.5 ± 0.4
$e + \mu$ relaxed	$\star$	$(10, 10)$	0.1 ± 0.0
$\mu + \tau$	A_Mu5_TauJet20	$(15, 20)$	0.0 ± 0.0

Juan Alcaraz Maestre,
Adam Everett,
Muriel Vander Donckt, …

Meenakshi Narain, …

Lotte Wilke

Greg Landsberg, Duong Nguyen,
Len Christofek, Muriel Vander Donckt,
Sylvia Goy Lopez

Vuko Briglevic

Rates: Pedram Bargassa

HLT Menu: Jet MET

HLT path	L1 condition	Thresholds (GeV)	HLT Rate (Hz)
Single-Jet	A_SingleJet150	200	9.6 ± 0.1
Double-Jet	A_SingleJet150 A_DoubleJet70	150	10.9 ± 0.0
Triple-Jet	†	85	7.9 ± 0.1
Quad-Jet	‡	60	4.1 ± 0.1
$\not{E}_T$	A_ETM40	65	5.2 ± 0.7
Acopl. Double-Jet	A_SingleJet150 A_DoubleJet70	125	1.5 ± 0.0
Acopl. Single-Jet + $\not{E}_T$	A_ETM30	(100, 60)	1.8 ± 0.0
Acopl. Double-Jet + $\not{E}_T$	A_ETM30	(60, 60)	1.2 ± 0.0
Single-Jet + $\not{E}_T$	A_ETM30	(180, 60)	2.3 ± 0.1
Double-Jet + $\not{E}_T$	A_ETM30	(125, 60)	1.1 ± 0.0
Triple-Jet + $\not{E}_T$	A_ETM30	(60, 60)	0.7 ± 0.0
Quad-Jet + $\not{E}_T$	A_ETM30	(35, 60)	1.2 ± 0.1
VBF Double-Jet + $\not{E}_T$	A_ETM30	(40, 60)	0.3 ± 0.0
$H_T + \not{E}_T$	A_HTT300	(350, 65)	4.7 ± 0.1
SUSY 2-jet+$\not{E}_T$	A_ETM30	(80,20,60)	2.2 ± 0.1
Single Jet Prescale 10	A_SingleJet100	150	3.6 ± 0.1
Single Jet Prescale 100	A_SingleJet70	110	1.5 ± 0.1
Single Jet Prescale 1000	A_SingleJet30	60	0.8 ± 0.1

Len Apanasavich

Rates: Pedram Bargassa

HLT Menu: e, γ, τ + X

HLT path	L1 condition	Thresholds (GeV)	HLT Rate (Hz)
Single Isolated e	A_SingleIsoEG12	15	17.3 ± 2.3
Single Relaxed e	A_SingleEG15	17	9.3 ± 1.3
Double Isolated e	A_DoubleIsoEG8	10	0.2 ± 0.1
Double Relaxed e	A_DoubleEG10	12	0.9 ± 0.2
Single Isolated γ	A_SingleIsoEG12	30	8.3 ± 0.7
Single Relaxed γ	A_SingleEG15	40	2.8 ± 0.2
Double Isolated γ	A_DoubleIsoEG8	(20,20)	0.6 ± 0.4
Double Relaxed γ	A_DoubleEG10	(20,20)	1.9 ± 0.5
High E_T e	A_SingleEG15	80	0.5 ± 0.2
High E_T e	A_SingleEG15	200	0.1 ± 0.0
Lifetime b-tag 1-jet	◇	180	1.5 ± 0.2
Lifetime b-tag 2-jets	◇	120	2.4 ± 0.3
Lifetime b-tag 3-jets	◇	70	1.9 ± 0.1
Lifetime b-tag 4-jets	◇	40	2.1 ± 0.1
Lifetime b-tag H_T	◇	470	2.9 ± 0.1
Charged Higgs τ	A_SingleTauJet10	15	0.2 ± 0.0
$\tau + E_T$	A_TauJet30_ETM30	15	1.8 ± 0.2
Double τ (Calo+Pixel)	A_DoubleTauJet40	15	5.0 ± 0.7
e + b-jet	A_IsoEG10_Jet10	(10, 35)	0.1 ± 0.0
e + jet	A_IsoEG10_Jet30	(12, 40)	11.9 ± 1.2
$e + \tau$	A_IsoEG10_TauJet20	(12, 20)	0.1 ± 0.2
Prescaled e/γ	A_SingleIsoEG5	—	3.0 ± 0.0
Prescaled μ	See Table 2.6		3.0 ± 0.0
Min.Bias	A_MinBias_HTT10	—	0.5 ± 0.0
Pixel Min.Bias	*Continued on next page ...*	—	0.5 ± 0.0
Zero Bias	A_ZeroBias	—	1.0 ± 0.0
	Total HLT rate (Hz)		150 ± 4.9

Monica Vazquez Acosta,
Marco Pieri,
Alessio Ghezzi, …

Ian Tomalin

Simone Gennai

Greg Landsberg, Duong Nguyen,
Len Christofek, Nadia Eram

Marta Felcini

Rates: Pedram Bargassa

HLT Timing Table

Sample	L1 efficiency (%)	L1 eff. $\times\ \sigma$ (pb)	Average time (ms)
Minimum bias	—	—	42.7
QCD $\hat{p_T} \in [0, 15]$ GeV/c	0.08 ± 0.01	$(1.50 \pm 0.17) \times 10^8$	31
QCD $\hat{p_T} \in [15, 20]$ GeV/c	2.08 ± 0.11	$(3.14 \pm 0.17) \times 10^7$	36
QCD $\hat{p_T} \in [20, 30]$ GeV/c	5.75 ± 0.18	$(3.71 \pm 0.11) \times 10^7$	40
QCD $\hat{p_T} \in [30, 50]$ GeV/c	21.70 ± 0.41	$(3.57 \pm 0.07) \times 10^7$	47
QCD $\hat{p_T} \in [50, 80]$ GeV/c	63.36 ± 0.84	$(1.38 \pm 0.02) \times 10^7$	53
QCD $\hat{p_T} \in [80, 120]$ GeV/c	95.96 ± 1.23	$(2.96 \pm 0.04) \times 10^6$	73
QCD $\hat{p_T} \in [120, 170]$ GeV/c	99.87 ± 1.18	$(4.93 \pm 0.05) \times 10^5$	143
QCD $\hat{p_T} \in [170, 230]$ GeV/c	100.00 ± 0.00	$(1.01 \pm 0.00) \times 10^5$	264
QCD $\hat{p_T} \in [230, 300]$ GeV/c	100.00 ± 0.00	$(2.45 \pm 0.00) \times 10^4$	385
$pp \to \mu X$	42.96 ± 0.00	$(1.03 \pm 0.00) \times 10^7$	74
$W \to e\nu$	92.58 ± 0.00	$(7.31 \pm 0.11) \times 10^3$	280
$W \to \mu\nu$	84.67 ± 0.00	$(8.38 \pm 0.08) \times 10^3$	123
$Z \to ee$	99.54 ± 0.00	$(8.16 \pm 0.05) \times 10^2$	739
$Z \to \mu\mu$	99.99 ± 0.00	$(7.82 \pm 0.09) \times 10^2$	184
Weighted sum of QCD, W, Z and $pp \to \mu X$ contributions			42.9 ± 6.4

Table 9.3: Average processing wall-clock times for running the High-Level Trigger Menu at $\mathcal{L} = 10^{32}$ cm^{-2} s^{-1} on L1-accepted events at an idle Core 2 5160 Xeon 3.0 GHz machine.

Times: Tulika Bose

HLT Times: Minbias

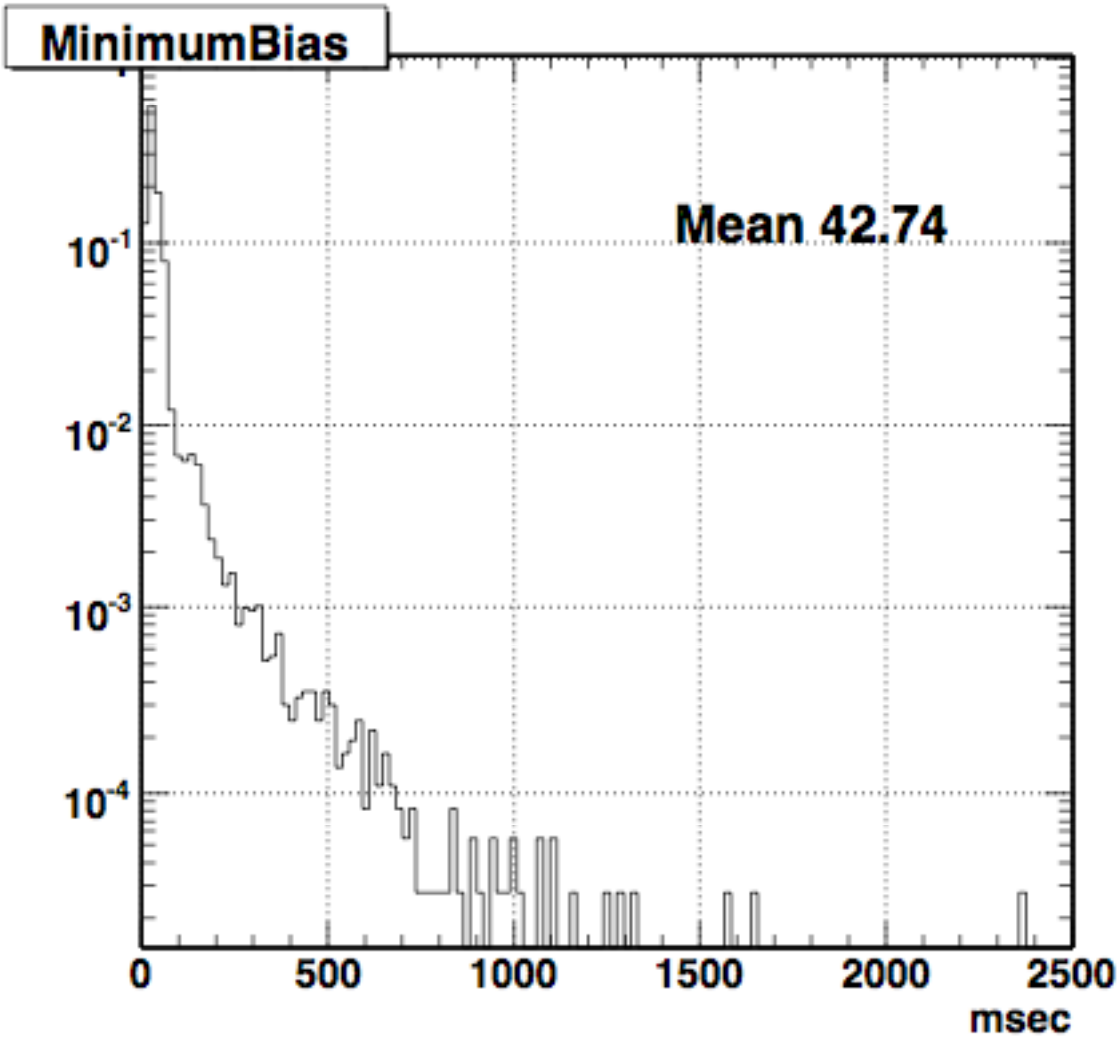

Time Plot: Tulika & Simone

HLT Times: QCD + EWK + μX

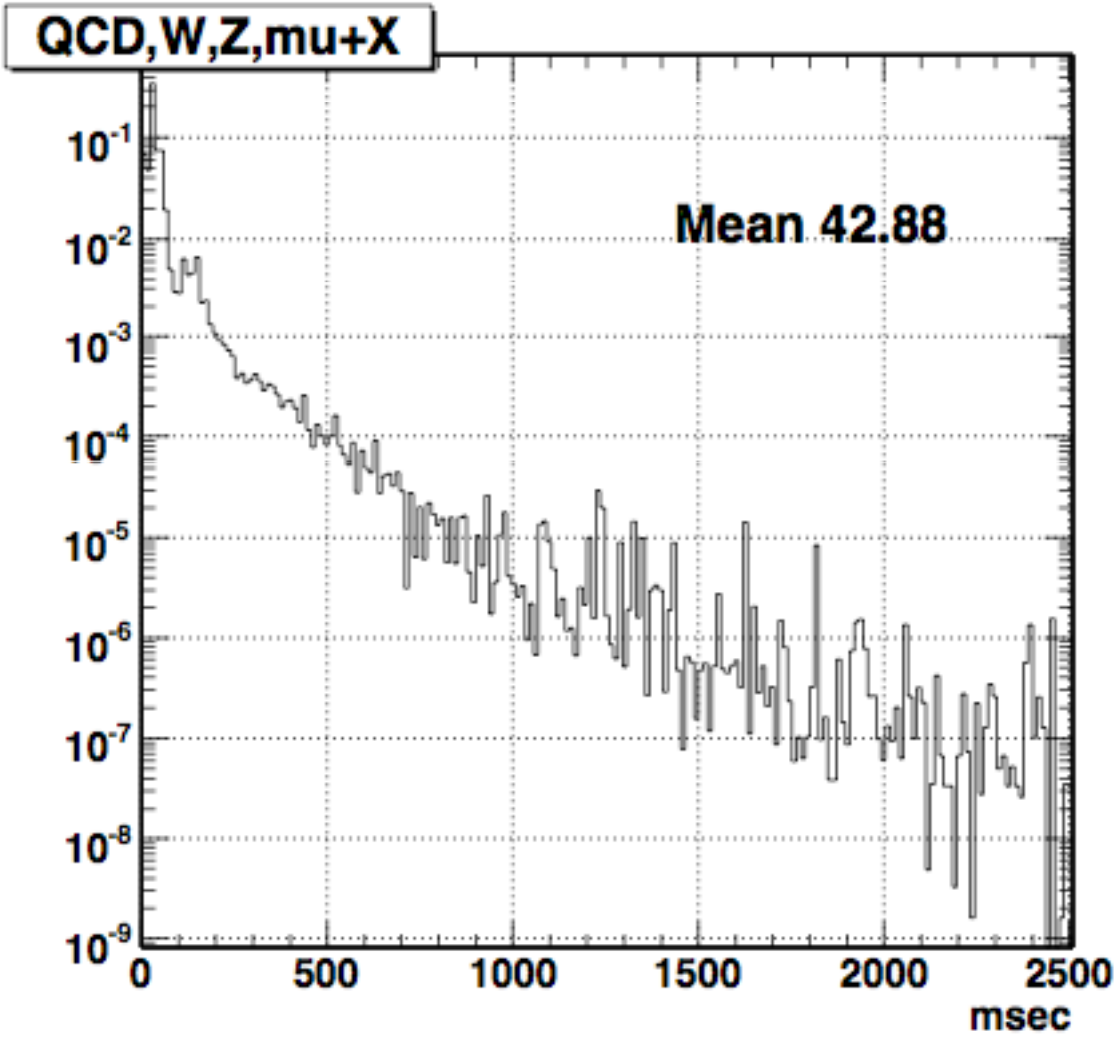

Time Plot: Tulika & Simone

Summary

LHC Trigger is Challenging

- The choice of physics studied is already made at level-1 trigger
  - Choices made with calorimeter and muon systems only
- Complete object reconstruction at higher level trigger
  - Optimum resolution online with calibration and alignment
  - Includes b/τ tagging in high level trigger farms
- CMS has designed trigger systems for golden discovery modes (lepton, diphoton, muti-jets…)
  - Startup triggers setup to restablish the Standard Model
  - Pickup searches for new particles where left off by Tevatron
  - Definitive exploration of higgs sector is assured
- Innovative designs may allow more measurements
  - Topological selection starting from level-1
  - Low mass higgs & some MSSM higgs decays to $\tau\tau$, invisible higgs

Commissioning is underway

- Steady progress in both L1 and HLT worlds
- Configuration plans for luminosities evolution from startup to design-level