Input Power Coupler for Testing

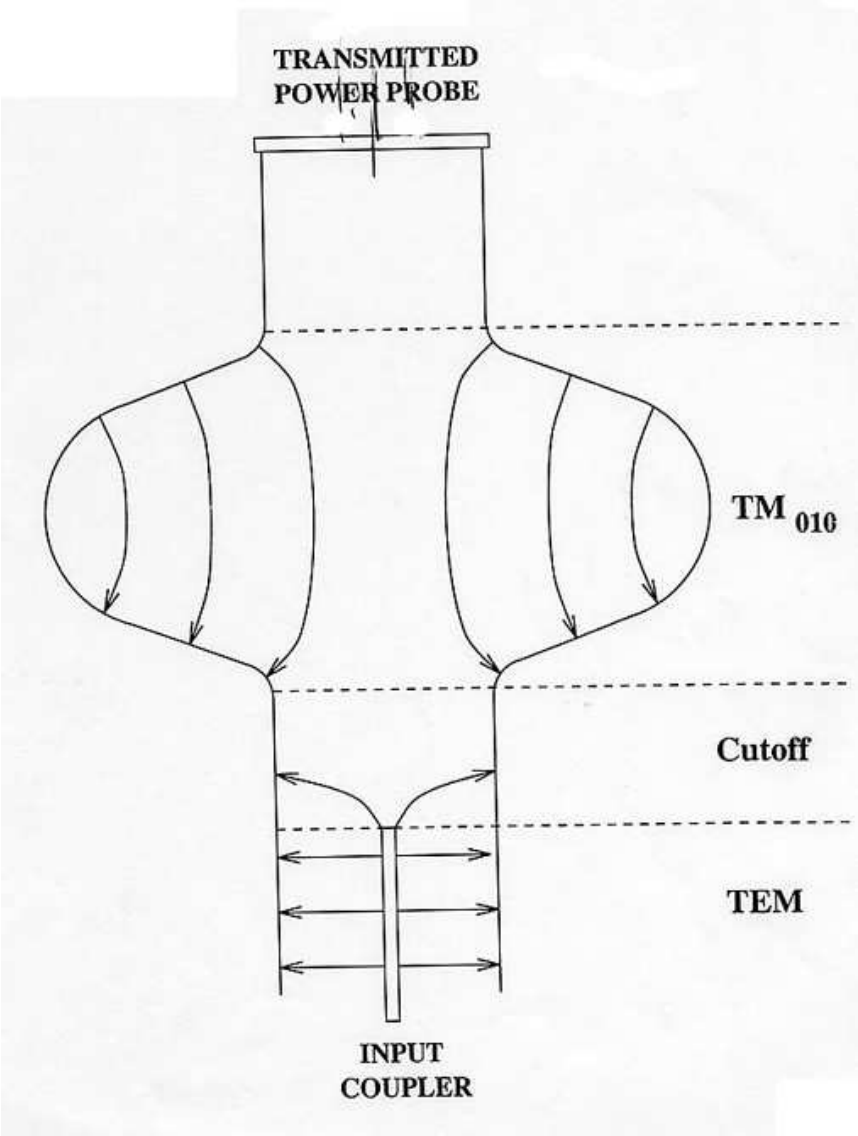

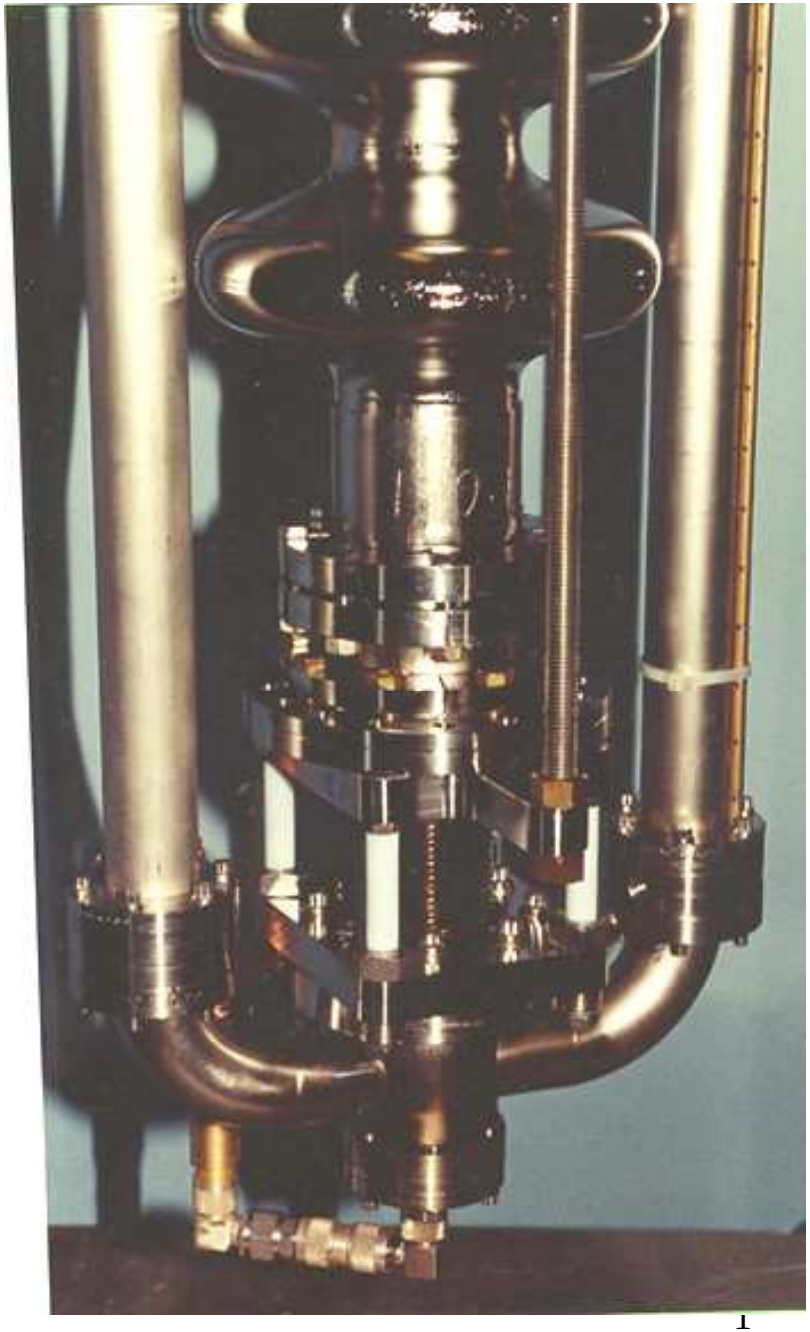

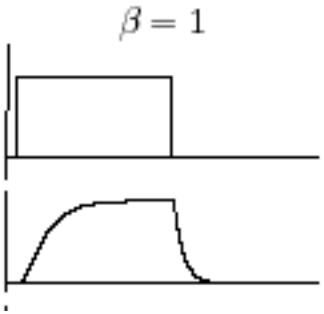

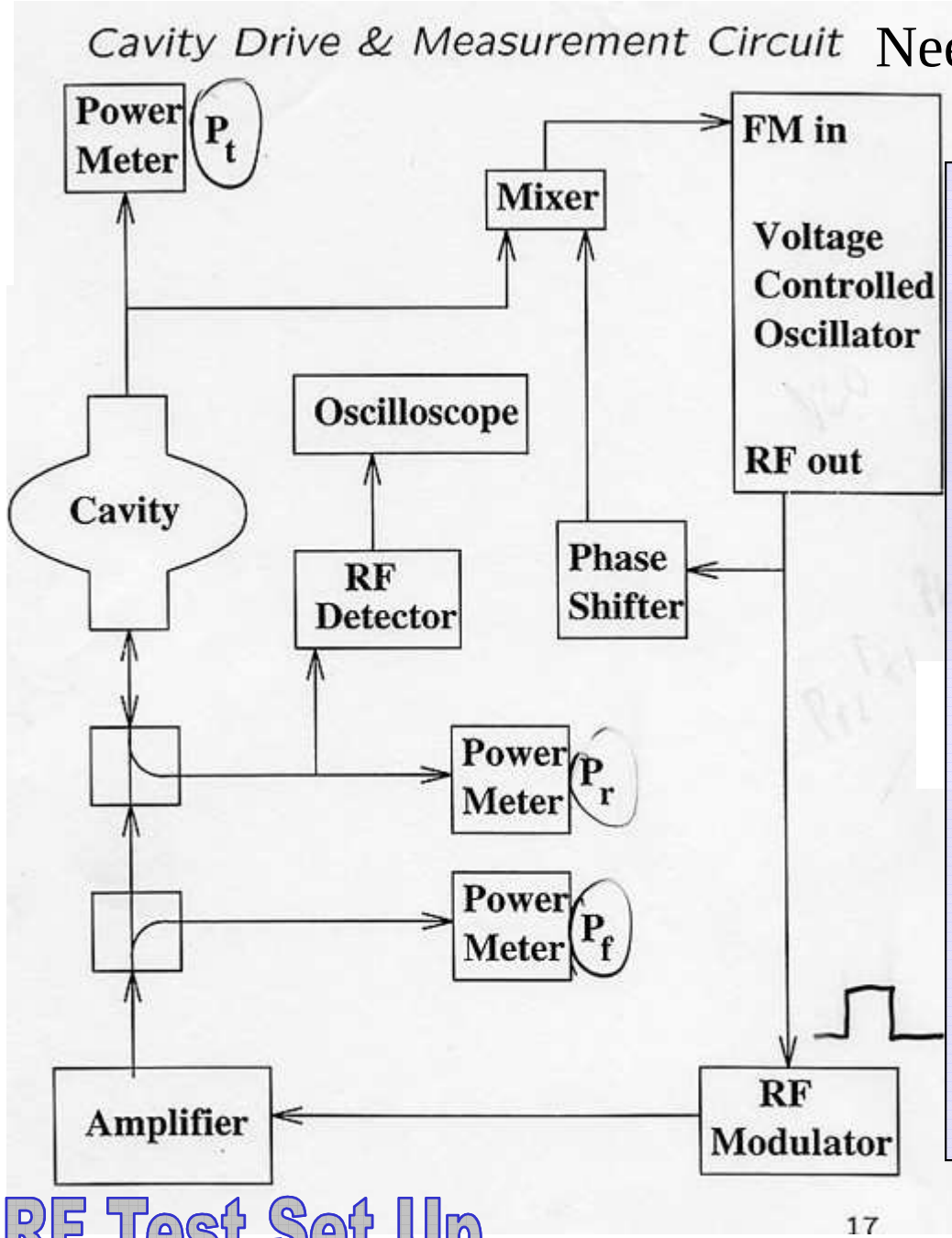

Need to measure Qo

$$P_{tot} = P_c + P_e + P_t.$$

$$Q_0 = \frac{\omega U}{P_c},$$

$$Q_L \equiv \frac{\omega U}{P_{tot}}$$

$$\frac{dU}{dt} = -P_{tot} = -\frac{\omega U}{Q_L}.$$

$$U = U_0 \exp\left(\frac{-\omega t}{Q_L}\right),$$

$$\tau_L = \frac{Q_L}{\omega}.$$

RF Test Set Up

Essential Vertical Test Elements

1. LN shield
2. Transmitted power probe
3. Radiation shields
4. Liquid He transfer line
5. Vacuum pipe/support pipe
6. RF feedthrus for input and tranmitted power probes
7. Feedthru/wiring for thermometry
8. He bath pumping port for 2 K
9. Raditation shielding
10. Liquid Helium
11. Thermometry
12. Input coupler

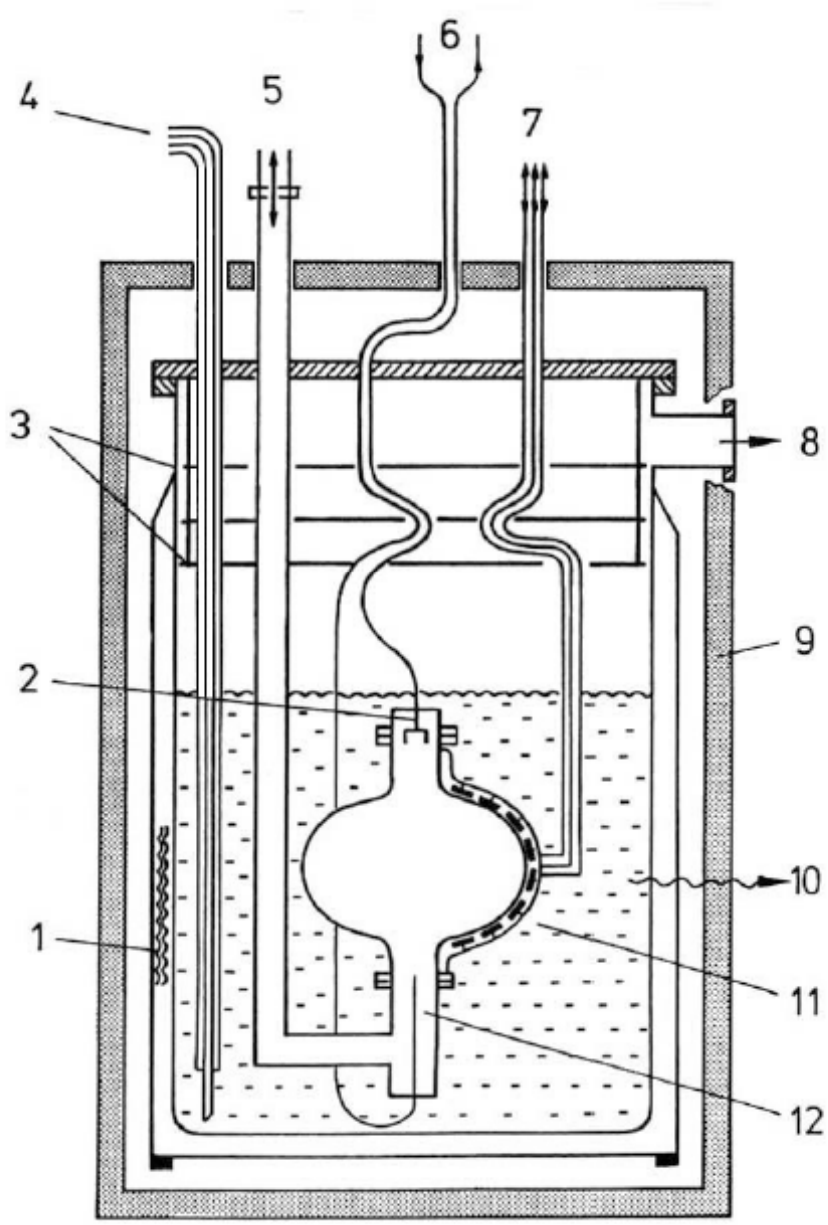

Vertical Cavity Testing

Small, Medium and Large Test Pits at Cornell

Medium
500 MHz Cavity Pit

Vertical Test Pits at Jlab

Main Test Result

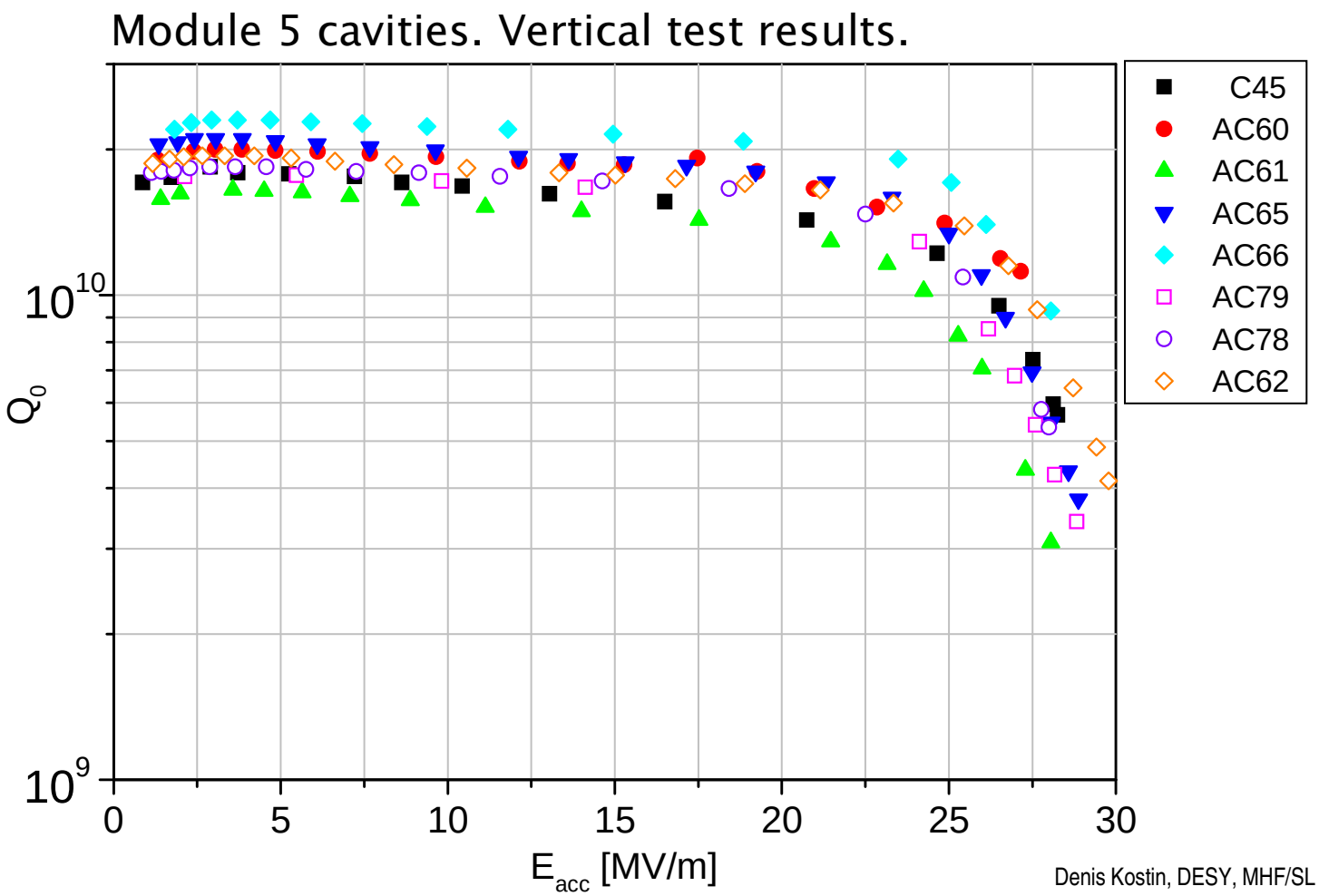

Rotatable Thermometry

Elements of Rotatable Thermometry

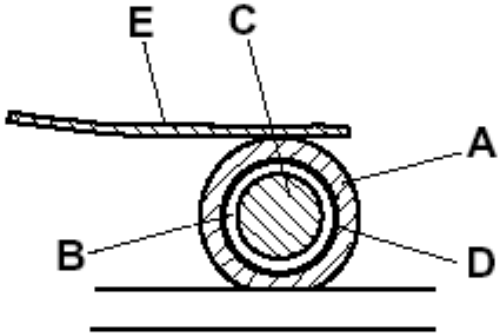

A: copper tube housing
B: bakelite insulation
C: carbon-filled body of resistor
D: gap filled with conduction silver
E: copper beryllium spring

(a) Cross section of a carbon thermometer.

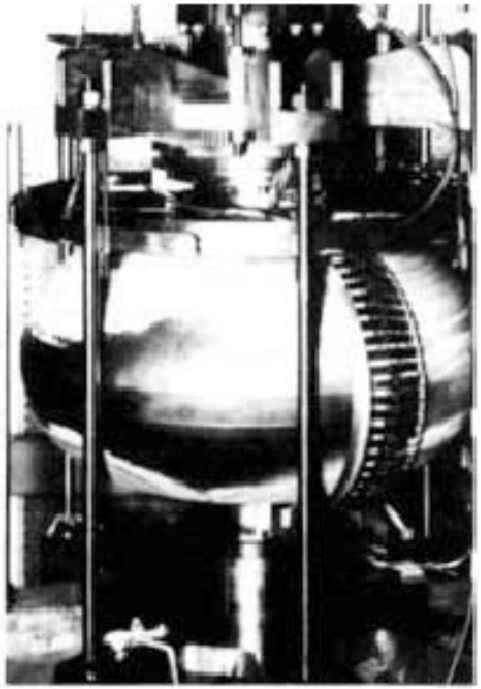

(b) Rotating arm on a 350-MHz cavity.

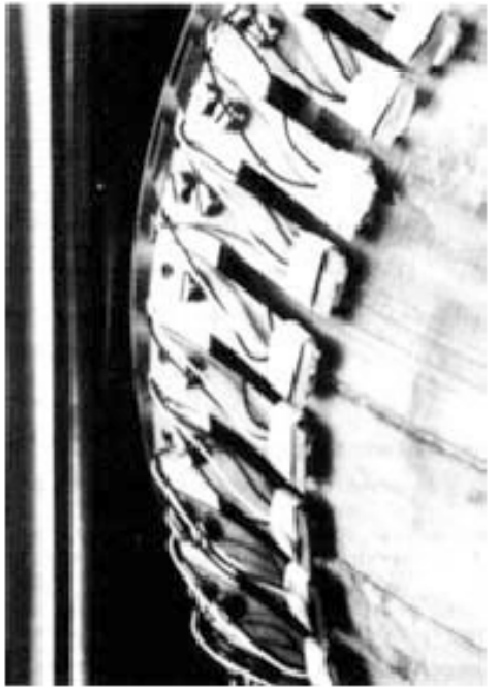

(c) Close-up of rotating arm.

Testing An Equator Weld With Fixed Thermometry

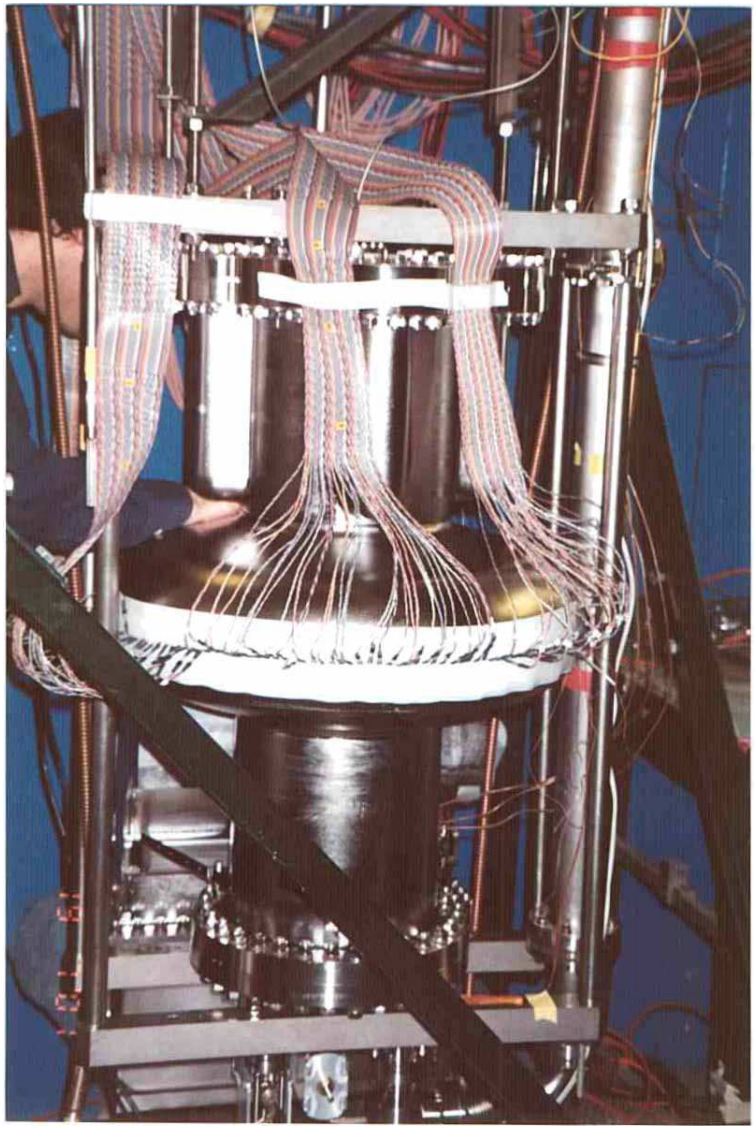

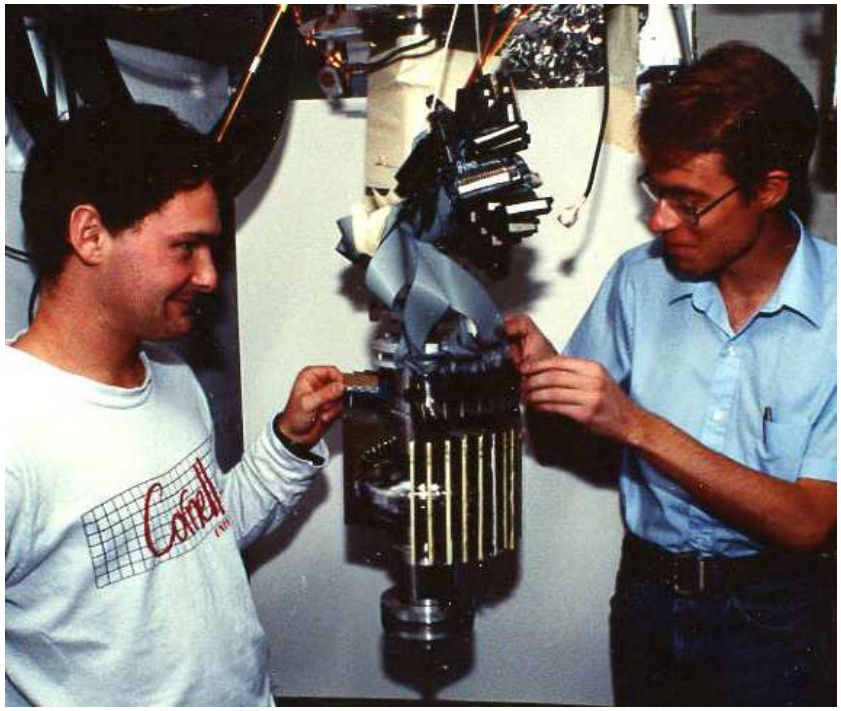

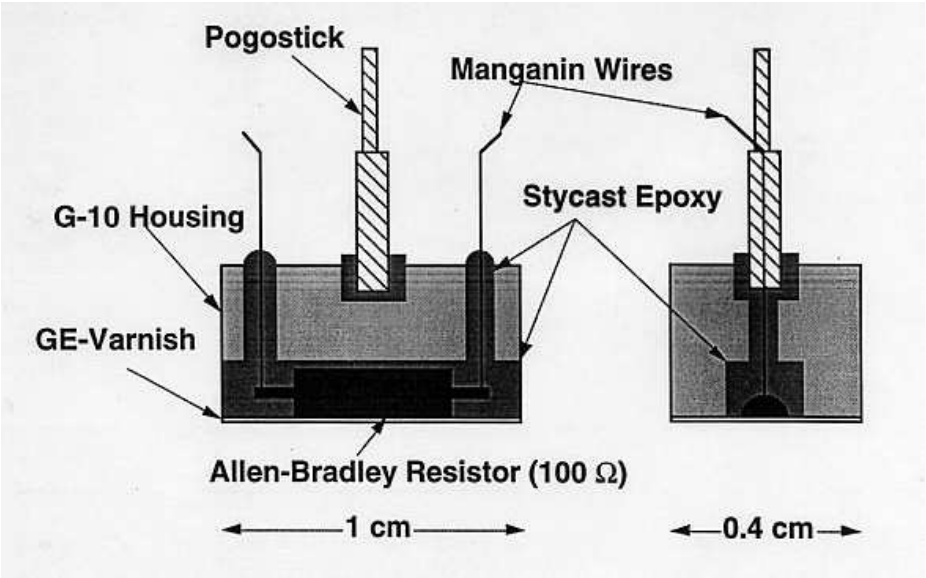

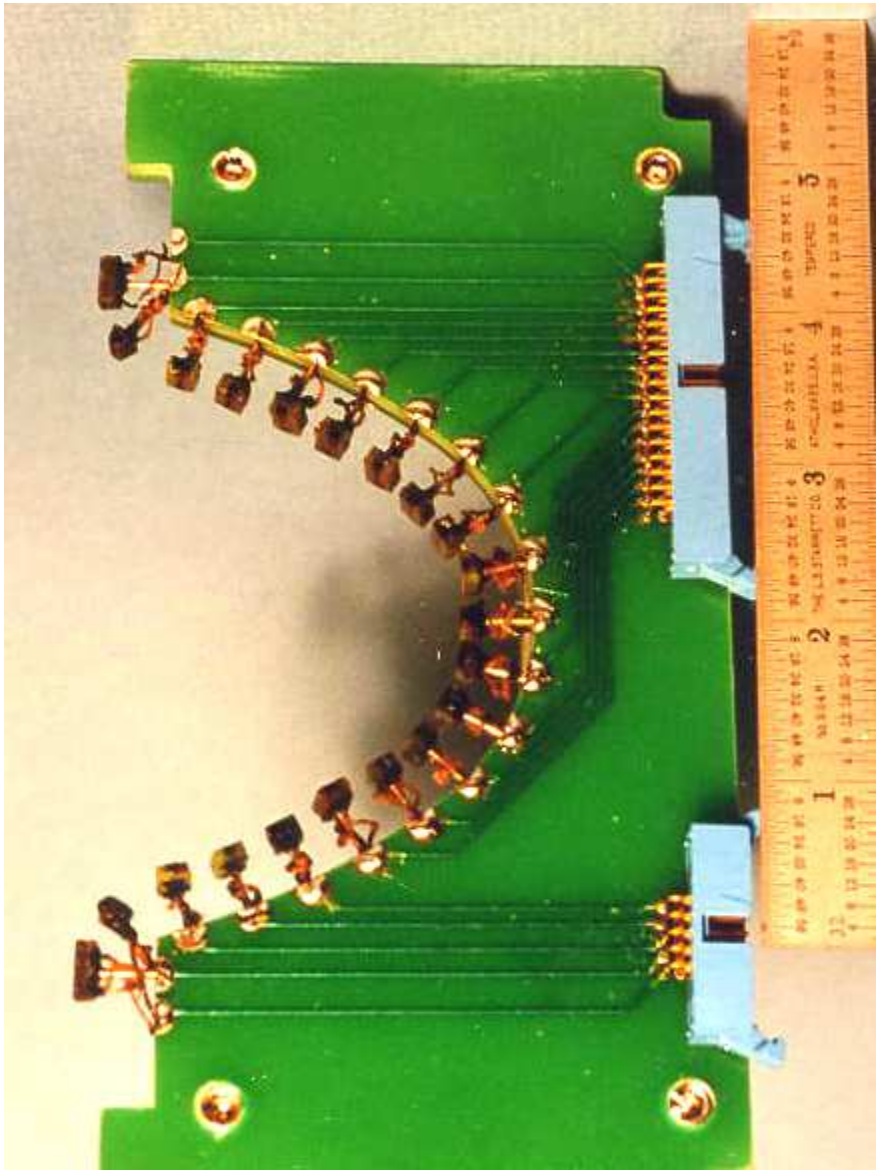

Fixed Thermometry

700 elements

Printed Circuit Wiring and Cabling

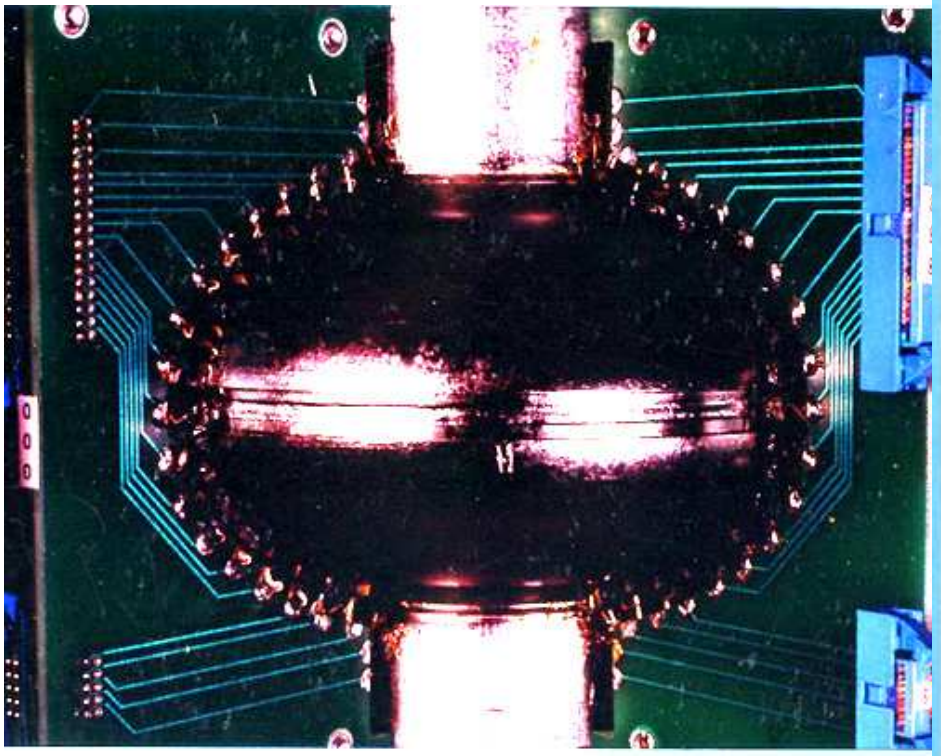

Temp Map for Electron field emission

- Thermometry detects a line of heat when field emission is active.
- May also get cavity quench.

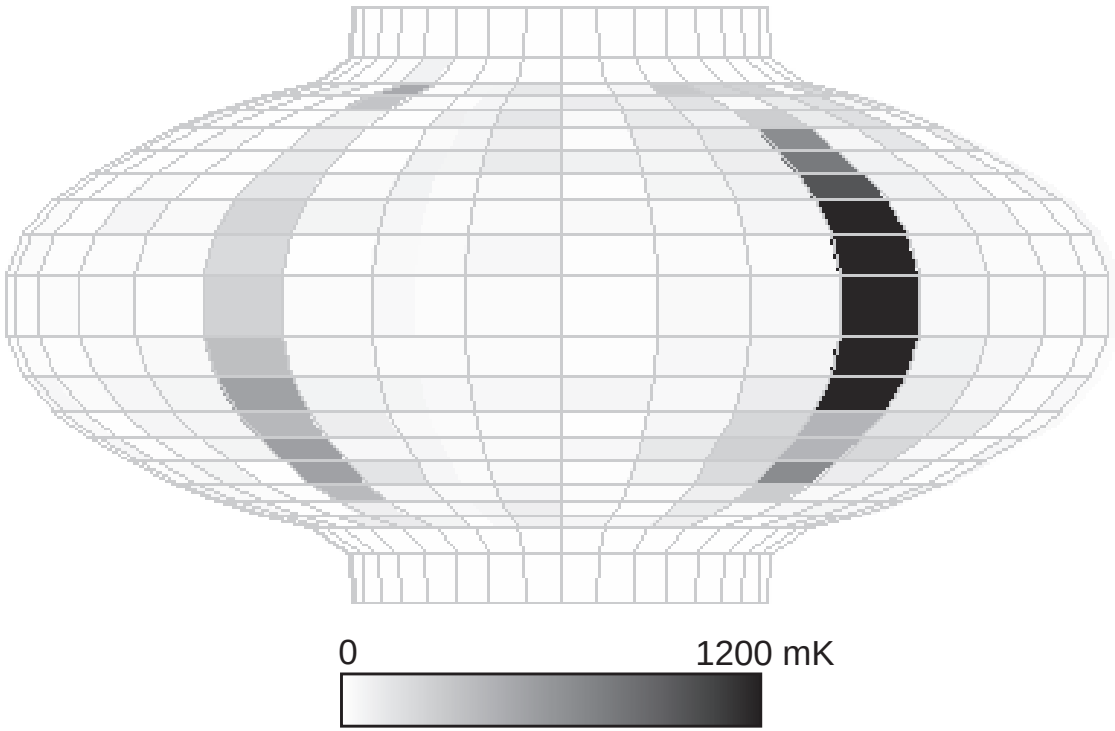

High Field Q Slope

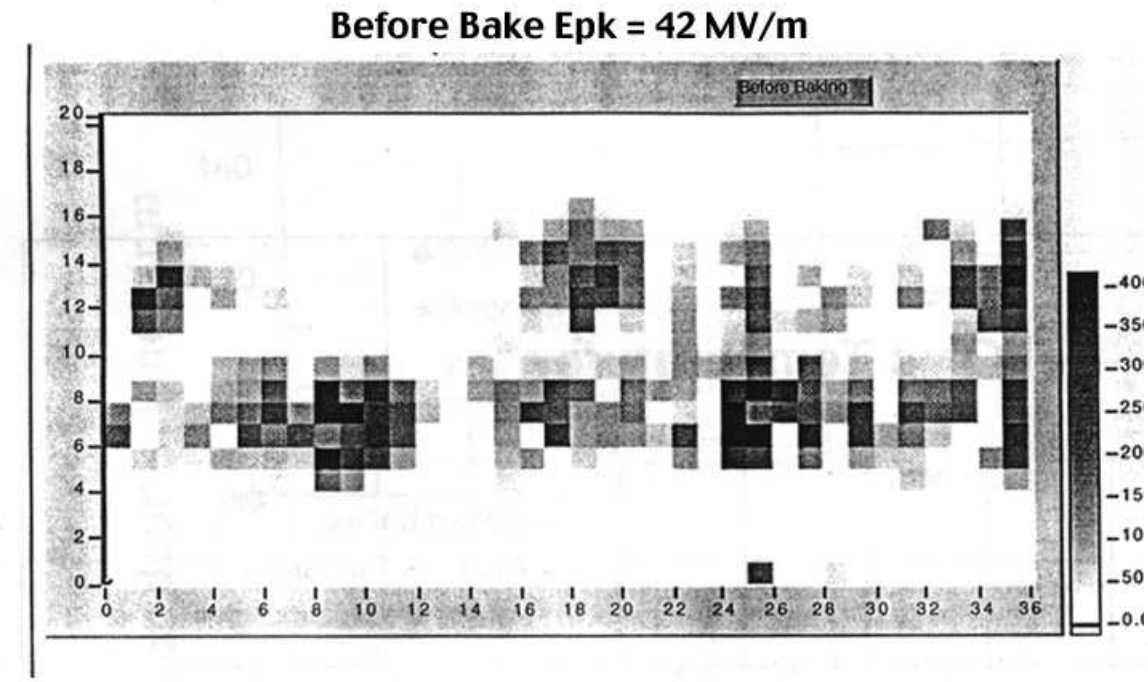

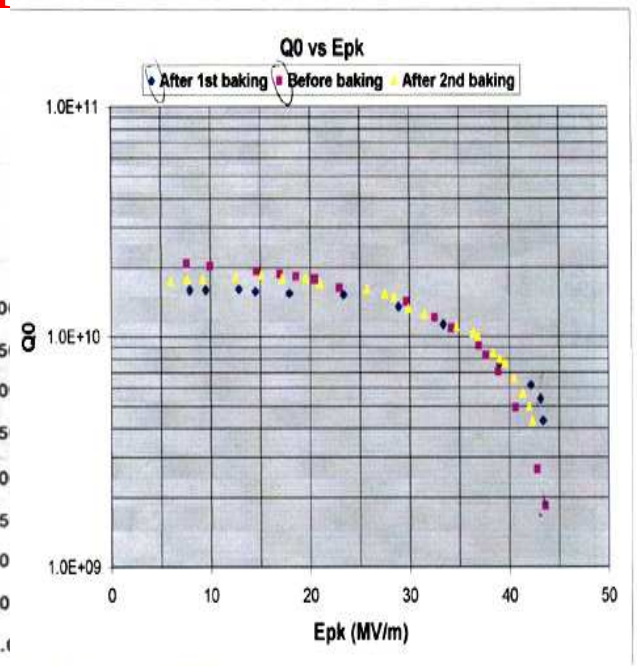

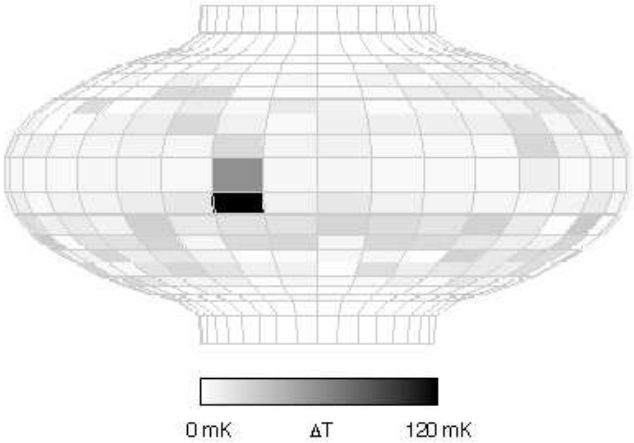

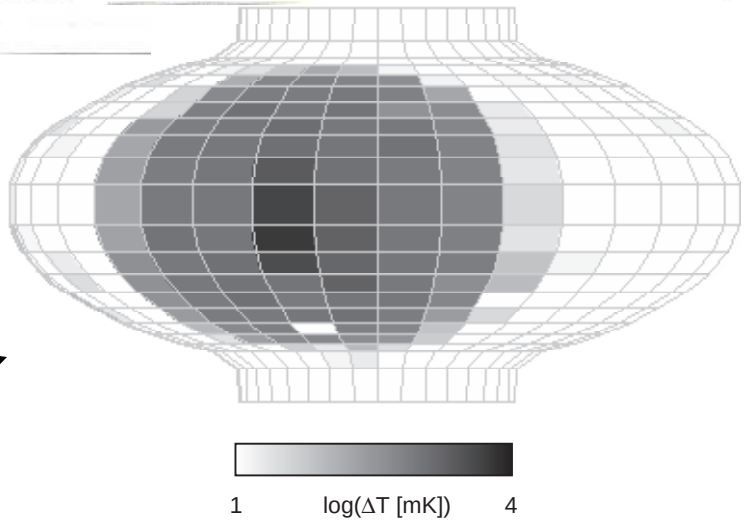

Thermal Breakdown

Q vs E by Thermometry

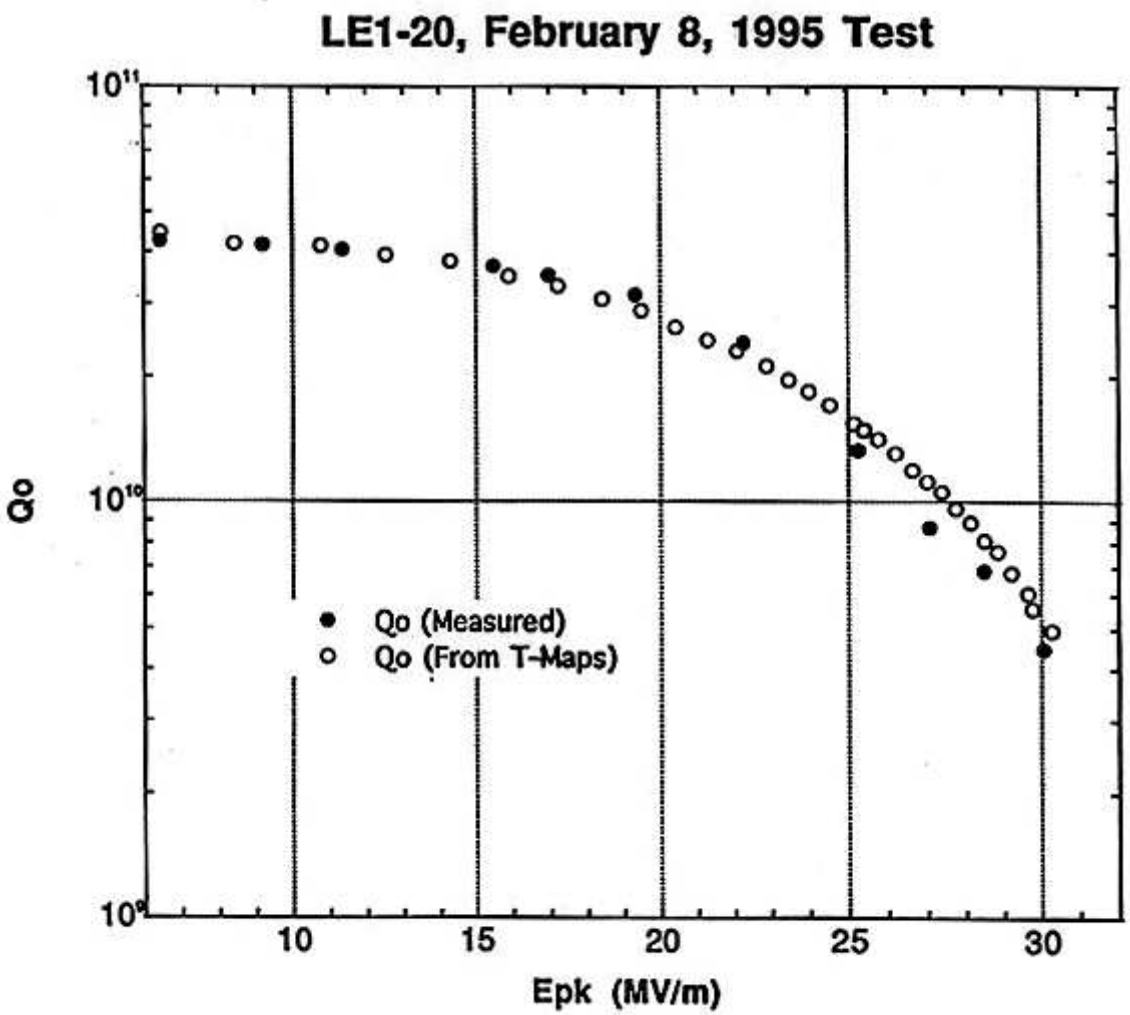

$$P_{\rm tot} = P_{\rm c} + P_{\rm e} + P_{\rm t}.$$

$$\begin{aligned} \frac{P_{\rm tot}}{\omega U} &= \frac{P_{\rm c} + P_{\rm e} + P_{\rm t}}{\omega U} \\ \frac{1}{Q_{\rm L}} &= \frac{1}{Q_0} + \frac{1}{Q_{\rm e}} + \frac{1}{Q_{\rm t}}, \end{aligned}$$

$$Q_{\rm e} \equiv \frac{\omega U}{P_e}$$

defining the "coupling parameters" as

$$\beta_{\rm e} \equiv \frac{Q_0}{Q_{\rm e}} \qquad\qquad \beta_{\rm e} = \frac{P_{\rm e}}{P_{\rm c}}$$

$$\frac{1}{Q_{\rm L}} = \frac{1}{Q_0}\left(1 + \beta_{\rm e} + \beta_{\rm t}\right).$$

$$Q_0 = (1 + \beta_e + \beta_t)\, \omega\, \tau_L$$

Need to measure Eacc or Epk

Cavity code calculation gives relationship between Eacc and U

$$E_{acc} = k \sqrt{U}$$

Simple case….also most accurate

Suppose $\beta_t << \beta_e$ Transmitted power probe weakly coupled

And Suppose $\beta_e = 1$ Input power probe matched tocavity wall losses,

$$P_f = P_c$$

From $Q_0 = \frac{\omega U}{P_c}$ $U = \frac{P_f \, Q_0}{\omega}$ $E_{acc} = k \sqrt{U}$

What if β not equal to 1?

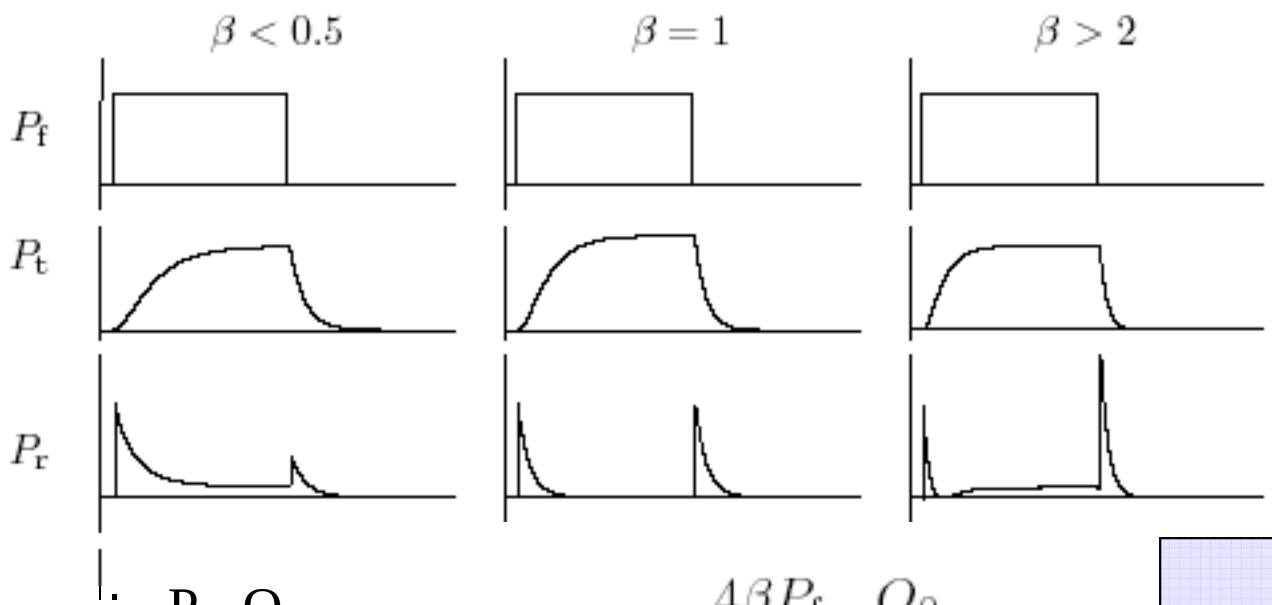

$$U = \frac{P_f\ Q_0}{\omega}$$

$$U_0 = \frac{4\beta P_f}{(1+\beta)^2}\frac{Q_0}{\omega}.$$

$$U = \frac{4P_f\ Q_0}{\beta\omega}$$

If $\beta >> 1$

$$\beta = \frac{1 \pm \sqrt{P_r/P_f}}{1 \mp \sqrt{P_r/P_f}},$$

$$\beta = \frac{1}{2\sqrt{\frac{P_f}{P_e}} - 1}.$$

$$P_r = \left\{1 - \frac{2\beta}{1+\beta}\left[1 - \exp\left(-\frac{t}{2\tau_L}\right)\right]\right\}^2 P_f.$$

$$P_r = P_e = \frac{4\beta^2}{(1+\beta)^2} P_f \exp\left(\frac{-t}{\tau_L}\right).$$