Input Power Coupler - Functions

Provides power to make up for wall losses at Eacc

Provides beam power = beam current x Vgain

Definition of Coupling Strength in terms of Q

$$P_{\text{lost to wall}} = \frac{V^2}{\frac{R}{Q} * Q_{wall}} \qquad Q_{wall} = \frac{V^2}{\frac{R}{Q} * P_{wall}}$$

$$P_{\text{lost through hole}} = \frac{V^2}{\frac{R}{Q} * Q_{hole}}$$

Defines Q_{hole} or $Q_{external}$

$$Q_{ext} = \frac{V^2}{\frac{R}{Q} * P_{ext}}$$

R/Q comes up again and again !

TTF3 Coupler Description

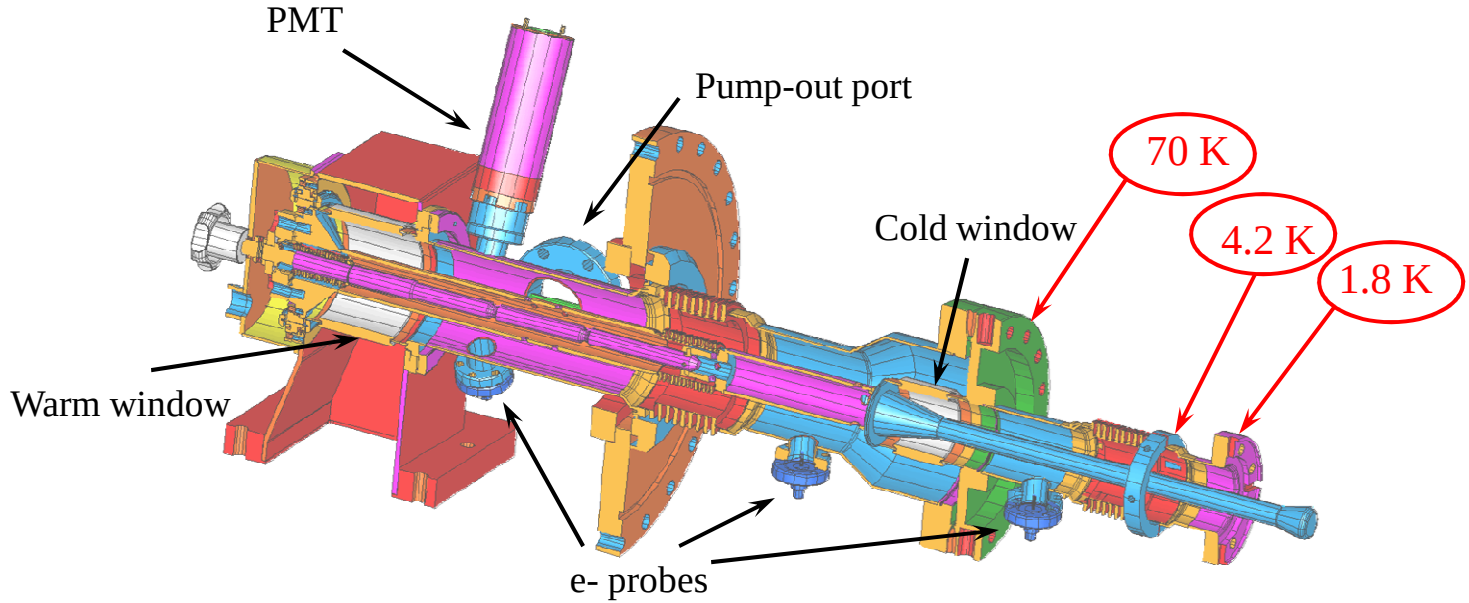

- **Designed for 5 kW average power**
- **Variable Q_{ext} range: 1×10^6 to 2×10^7 (calculated) for 15 mm antenna movement**
- **Cylindrical RF windows made of 97.5% Al_2O_3 with TiN coating**
- **Cold coaxial line: 70 Ohm, 40 mm OD**
- **Warm coaxial line: 50 Ohm, 62 mm OD**
- **All s.s. parts are made of 1.44 mm thick tubes**
- **Copper plating is 30 µm thick on inner conductor and 10 µm thick on outer conductor**
- **There are two heat intercepts: at 4.2 K and at 70 K**

TTF- Input Coupler Features

- 250 kW for 500 GeV, 500 kW for one TeV
- Two windows, cold and warm
- Cold window seals cavity in clean room
- Adjustable coupling
- Early versions allowed lateral motion for cold mass shrinkage
- 4.5K and 70 K intercepts
- Copper plated stainless steel components for reducing heat leak
- TiN coating for anti-multipactor
- Bias voltage for anti-multipactor

Multipacting, Secondary Emission Coefficient

- Not all potential barriers are active because electron multiplication has to exceed unity.

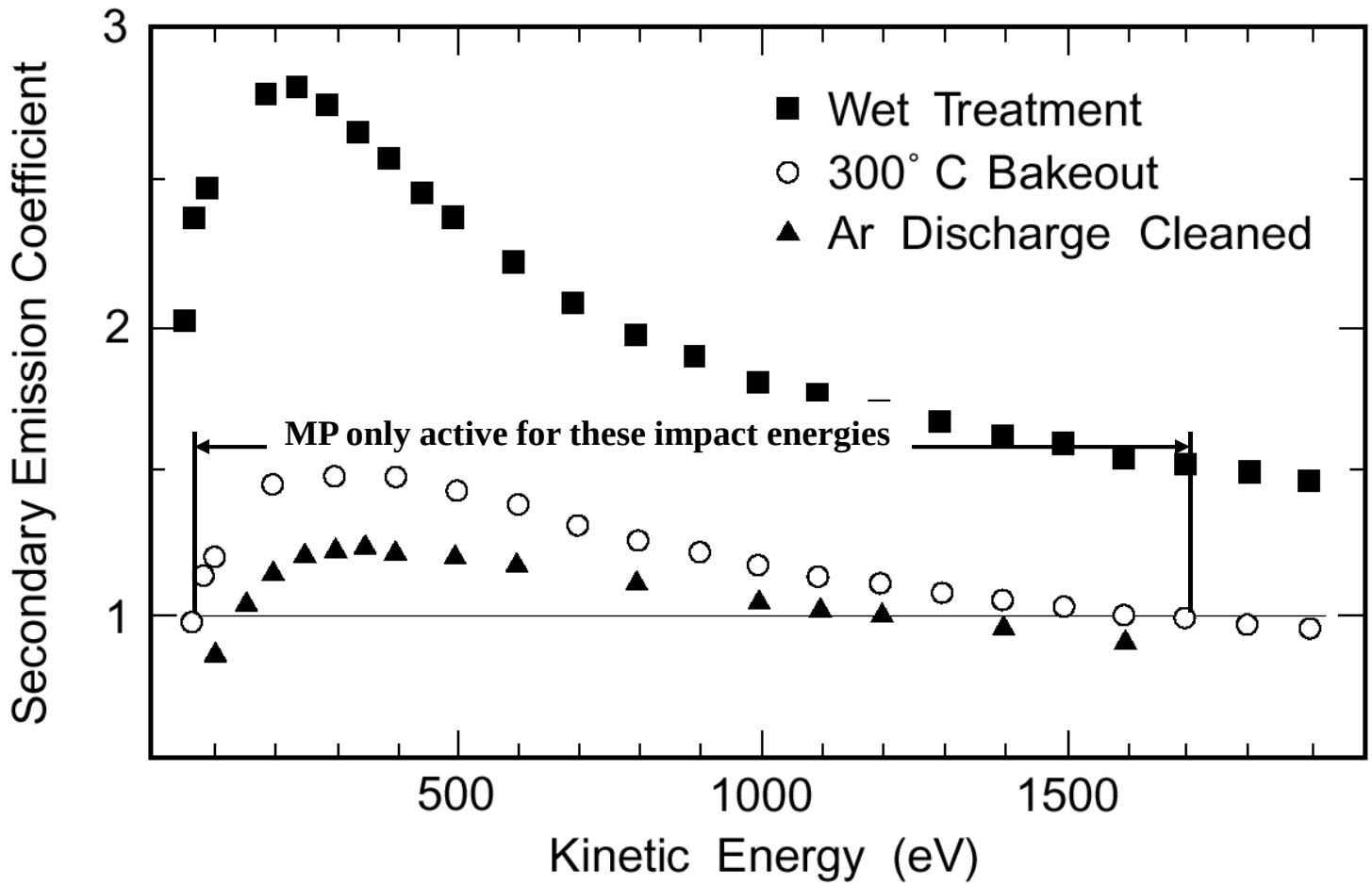

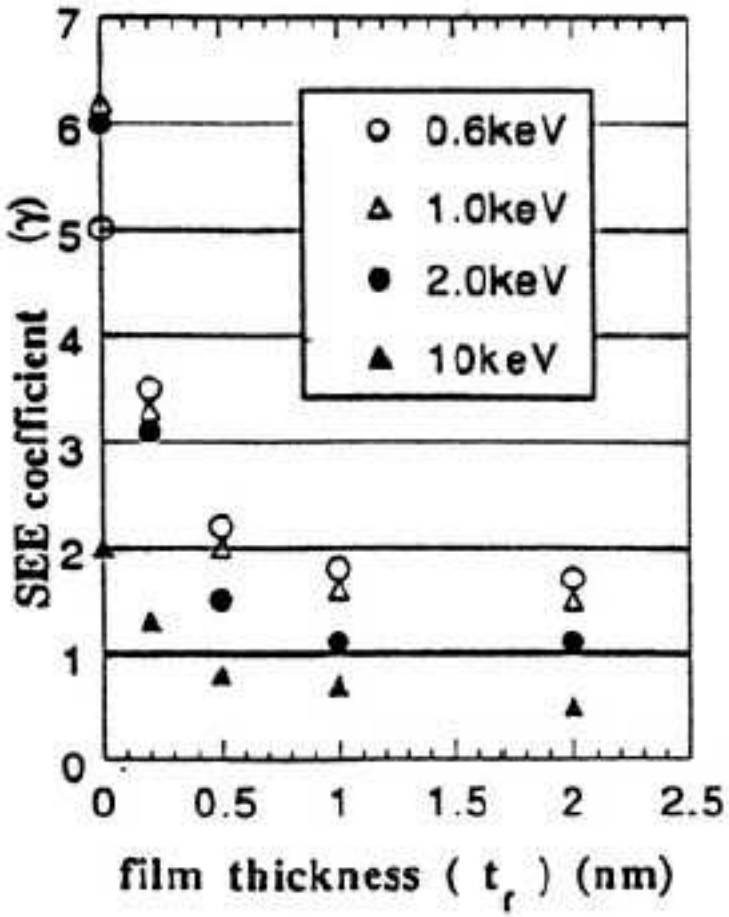
0.6keV
1.0keV
2.0keV
10keV
SEE coefficient (γ)
film thickness (t_f) (nm)
0
1
2
3
4
5
6
7
0
0.5
1
1.5
2
2.5

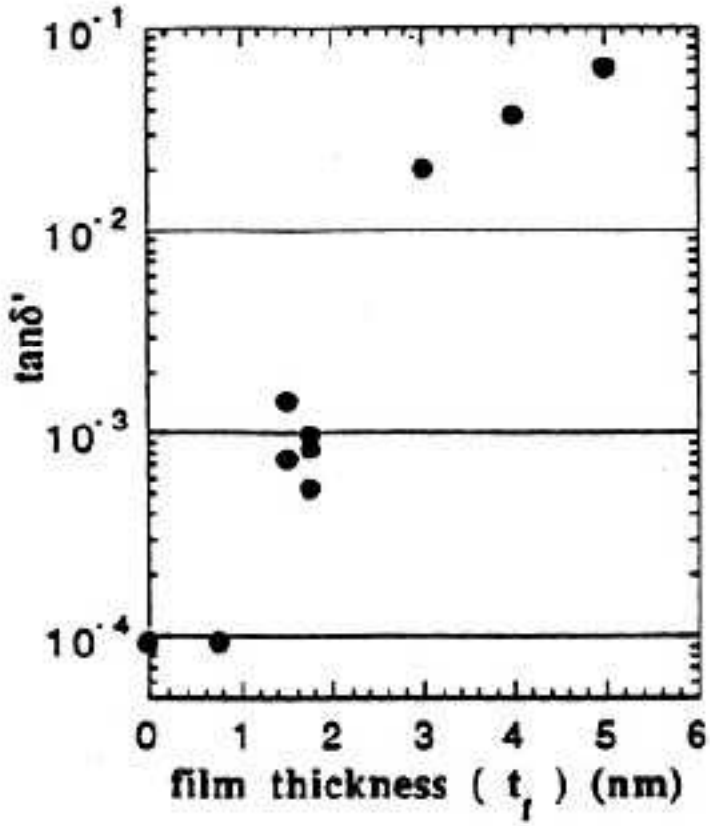
tanδ'
film thickness (t_f) (nm)
10^{-1}
10^{-2}
10^{-3}
10^{-4}
0
1
2
3
4
5
6

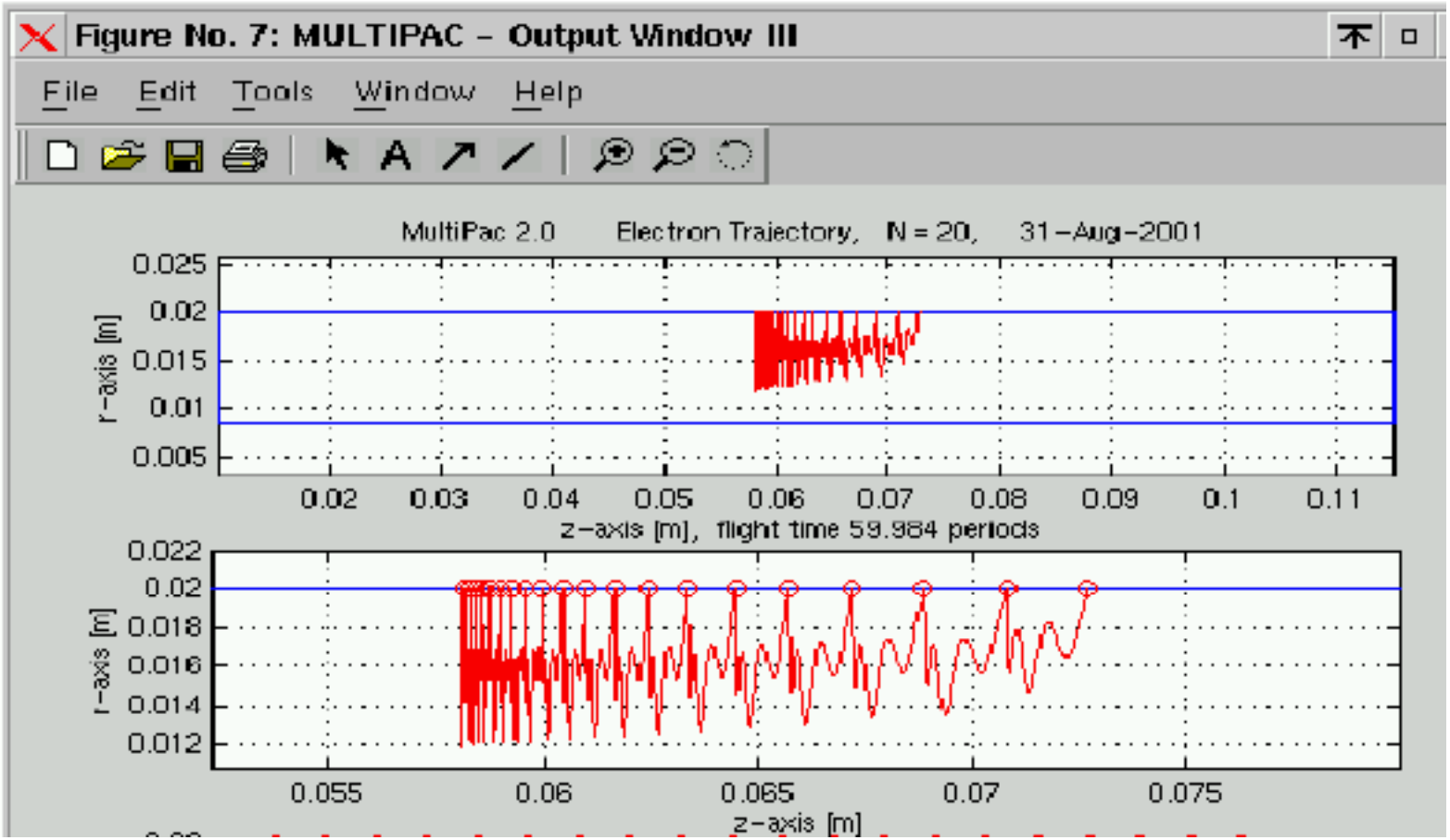

Figure 4. Multipacting simulations in coaxial lines: upper picture shows trajectories from outer conductor along the coax-line; lower picture as above but enlarged;

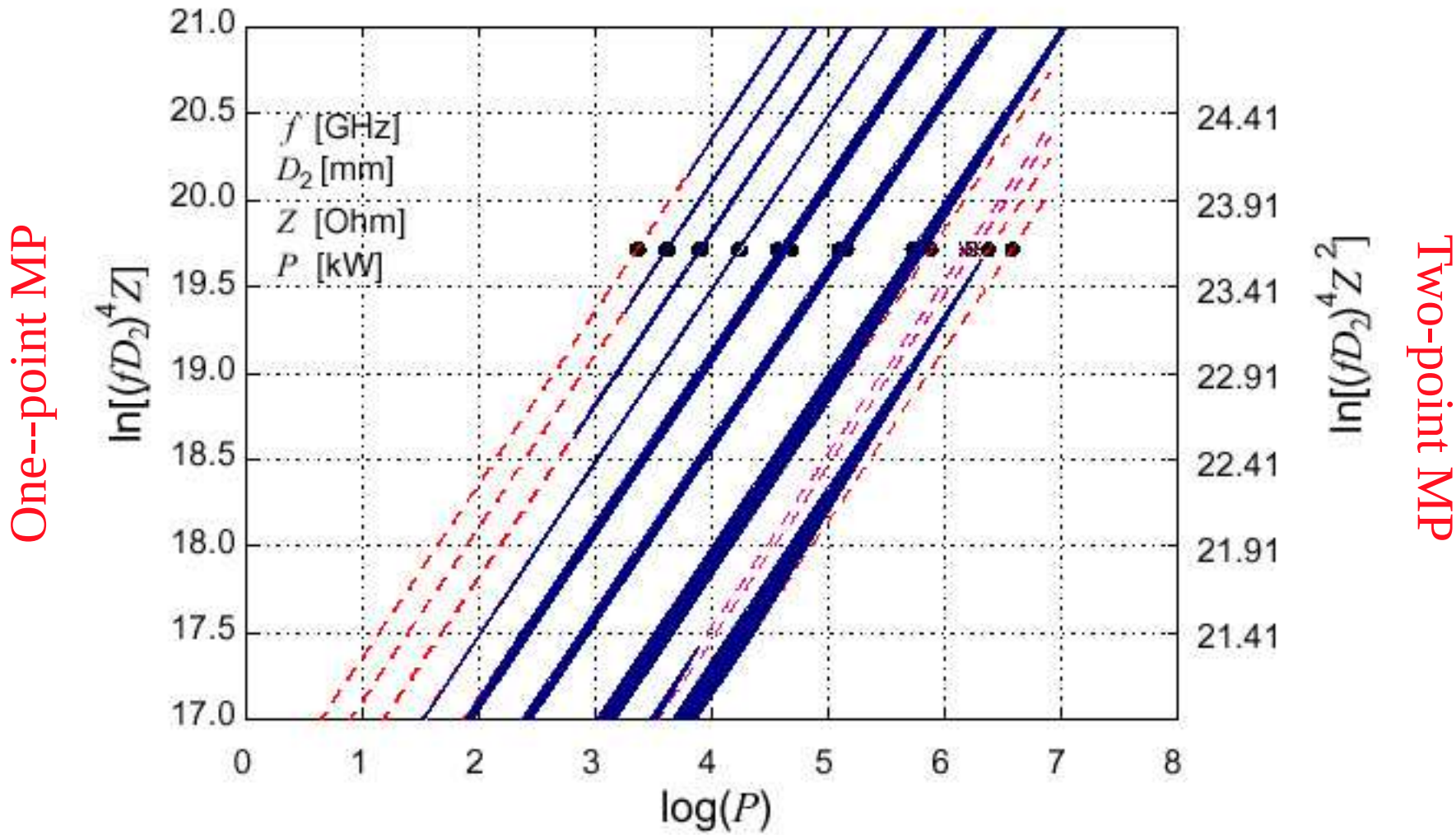

Multipacting Bands

Figure 10.17: Incident power levels at which multipacting in a coaxial line is predicted. The left ordinate applies to one-point multipacting and the right ordinate applies to two-point multipacting. Bands enclosed by solid circles mark power levels for one-point multipacting, and the band enclosed by asterisks marks power levels for two-point multipacting. The portion of each band for which the electron impact energy satisfies $100\ \mathrm{eV} \leq K \leq 1500\ \mathrm{eV}$ is shaded black [167]. (Courtesy of University of Helsinki.)

Coupler Specification (1)

frequency	1.3 GHz
operation	pulsed: 500 µsec risetime, 800 µsec flat top with beam
two windows, TiN coated	• safe operation • clean cavity assembly for high Eacc
2 K heat load	0.06 W
4 K heat load	0.5 W
70 K heat load	6 W
isolated inner conductor	bias voltage, suppressing multipacting
Diagnostics / interlocks	sufficient for safe operation and monitoring

Coupler specification (2)

	TTF	**TESLA** 9cell / upgrade	**XFEL**
Peak power + control margin	250 kW	250 kW / 500 kW	150 kW
Repetition rate	10 Hz	5 Hz	10 Hz
Average power	3.2 kW	3.2 kW / 6.4 kW	1.9 kW
Coupling (Qext)	adjustable (10^6 - 10^7)	fixed ($3*10^6$)	adjustable (10^6 - 10^7)

Many Generations of TTF Couplers

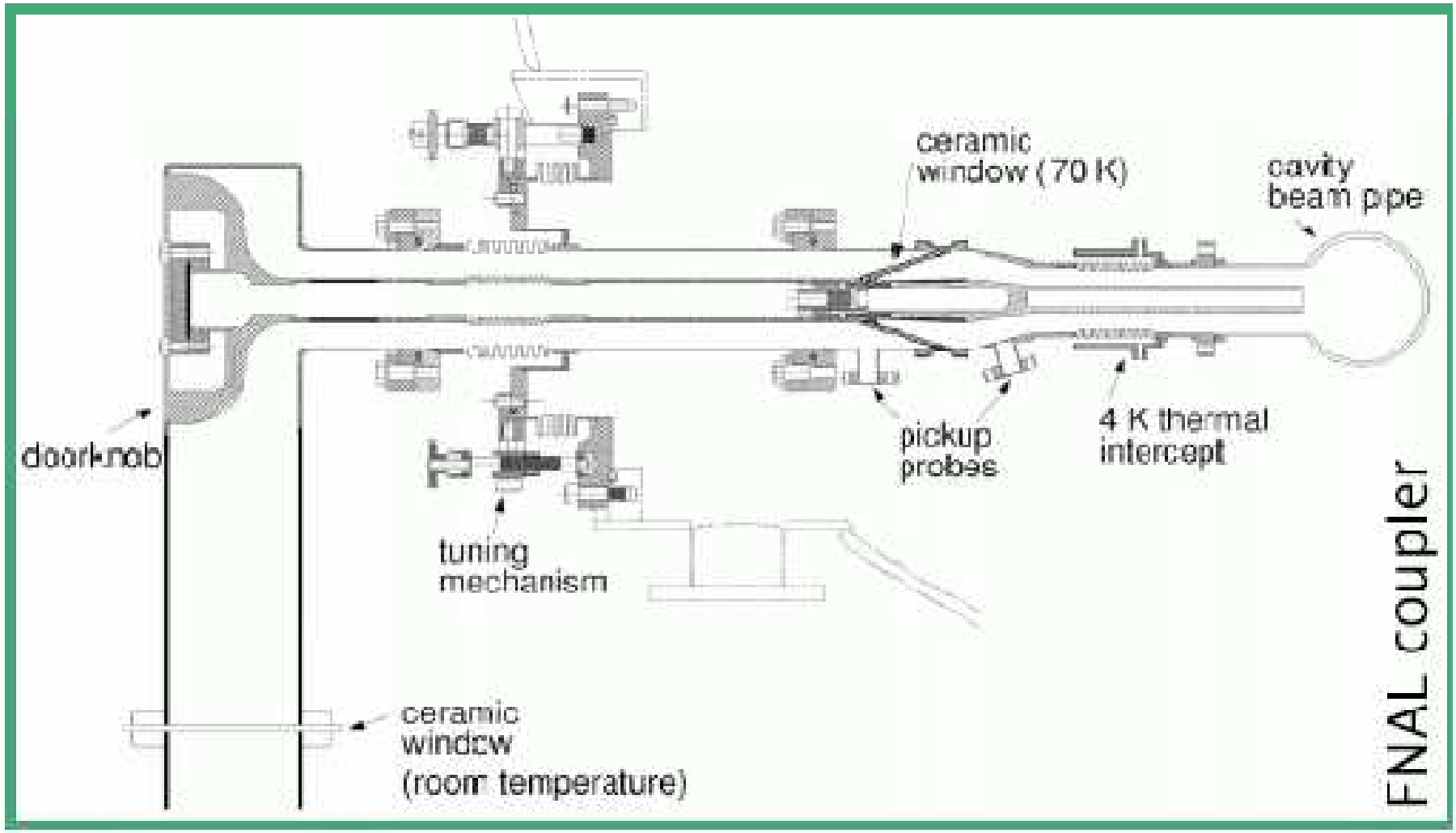

TTF-II

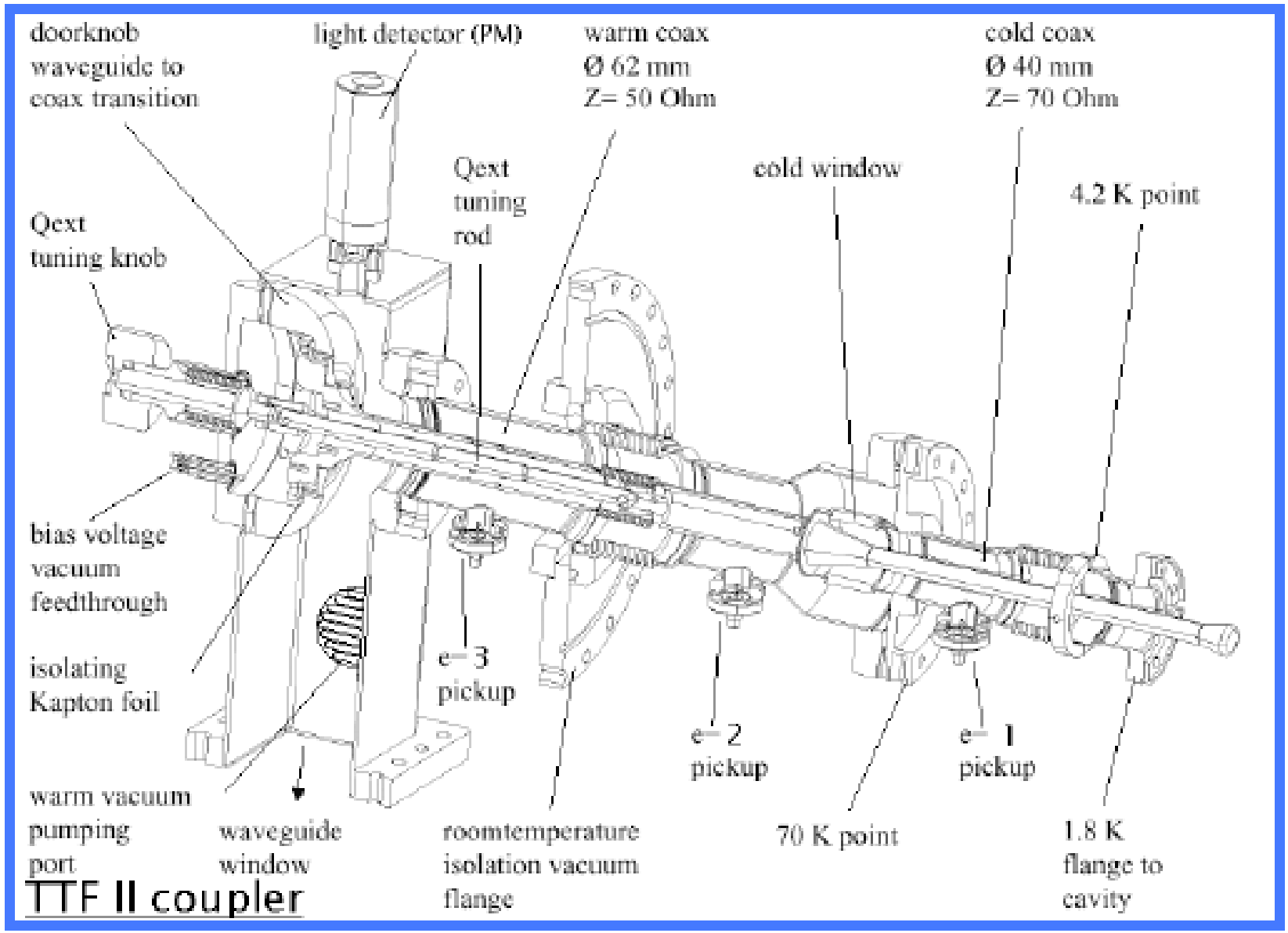
doorknob
waveguide to
coax transition
light detector (PM)
warm coax
Ø 62 mm
Z= 50 Ohm
cold coax
Ø 40 mm
Z= 70 Ohm
Qext
tuning
rod
cold window
4.2 K point
Qext
tuning knob
bias voltage
vacuum
feedthrough
isolating
Kapton foil
e− 3
pickup
e− 2
pickup
e− 1
pickup
warm vacuum
pumping
port
waveguide
window
roomtemperature
isolation vacuum
flange
70 K point
1.8 K
flange to
cavity
TTF II coupler

TTF3 Coupler

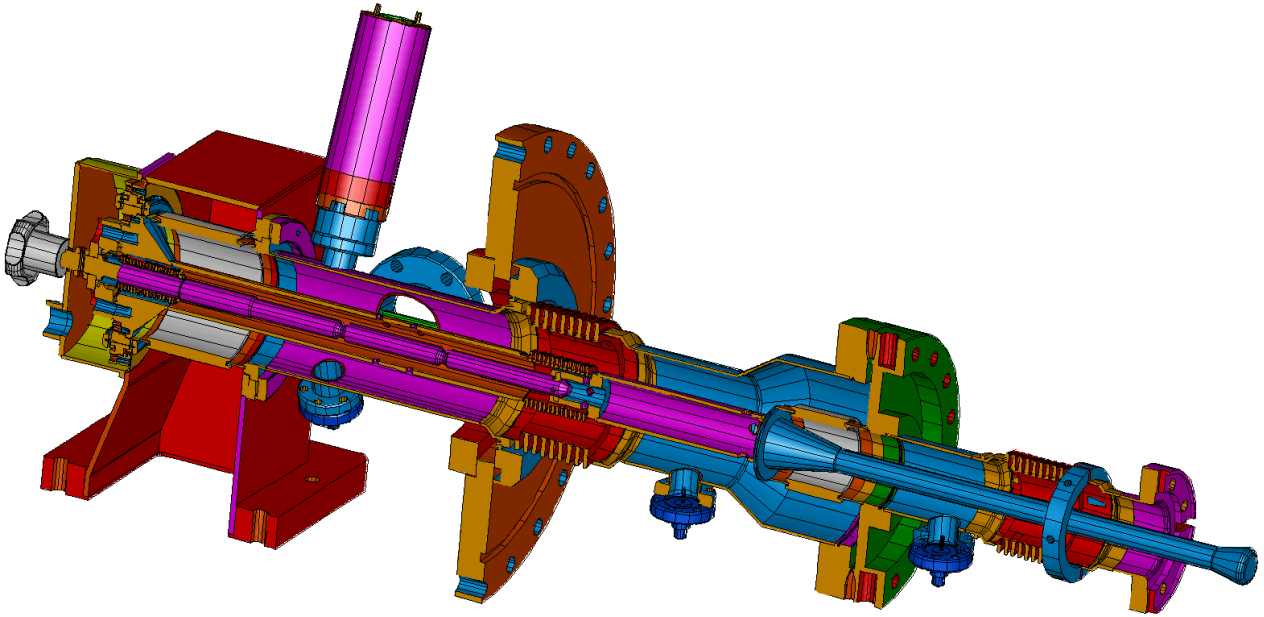

<u>The TTF3 coupler</u>

tested to 1.8 MW peak, 1.3 ms pulse length, 4.68 kW average power (TW);
coupling is adjustable from $Q_{ext} = 10^6$ to $Q_{ext} = 2\times10^7$

ERL Injector Cavity Coupler, 50 kW average power

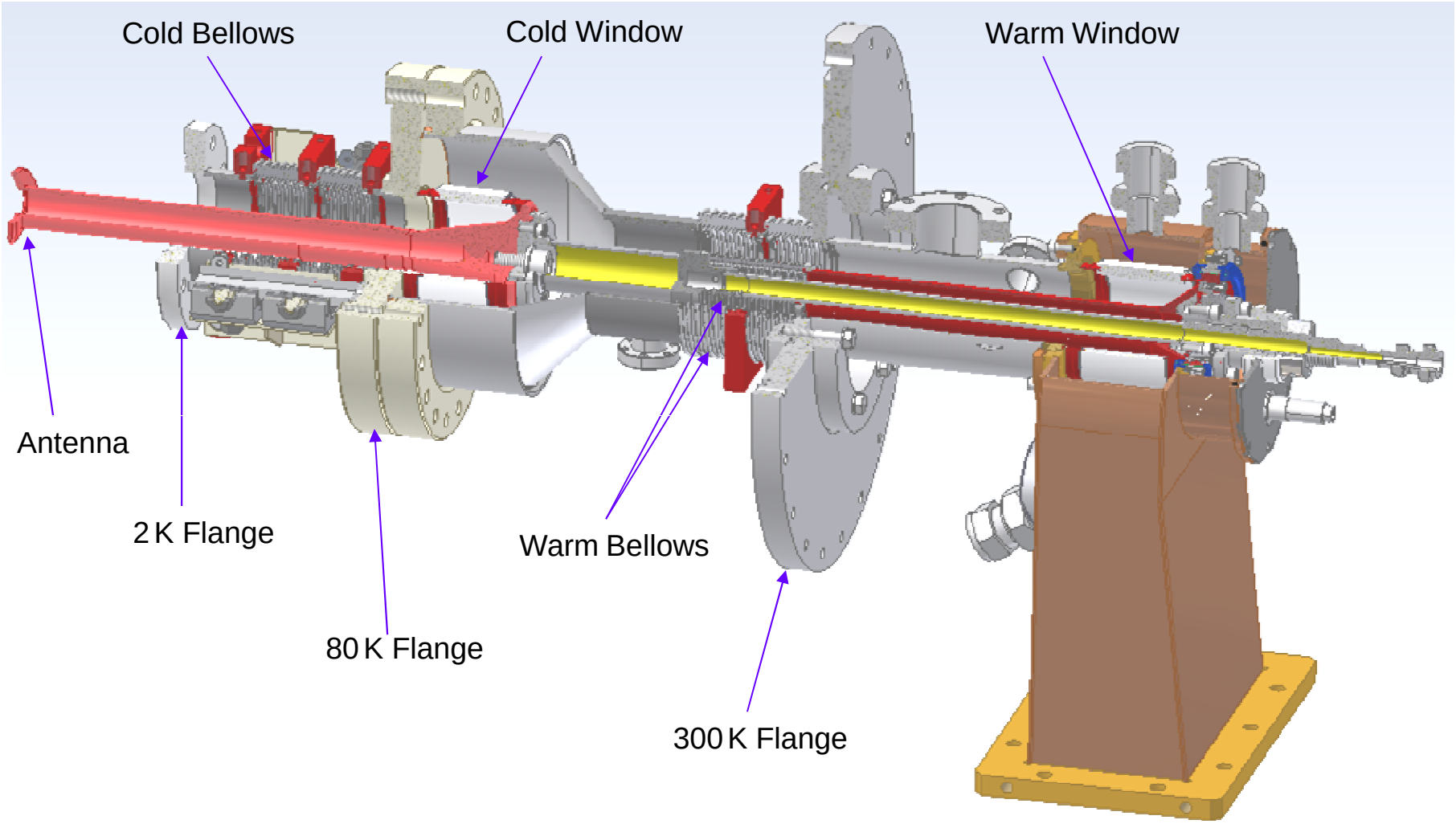

Cold Assembly

Warm Assembly

Series coupler production

Laser weld of bellows

Copper coated bellows

Ceramic-metal brazing

E-beam welding

Coupler Parts Produced in Industry

Test stand layout (D. Kostin)

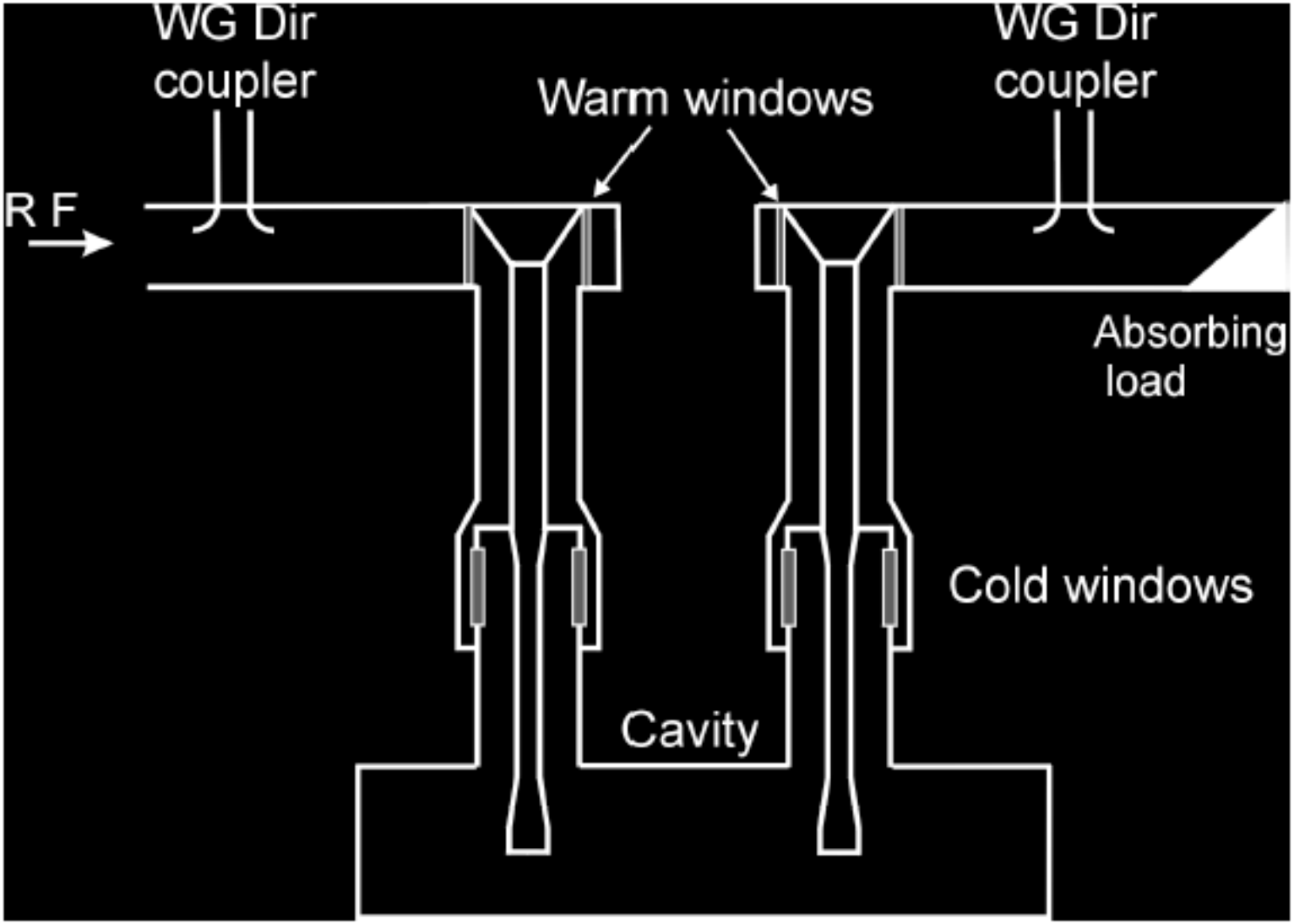

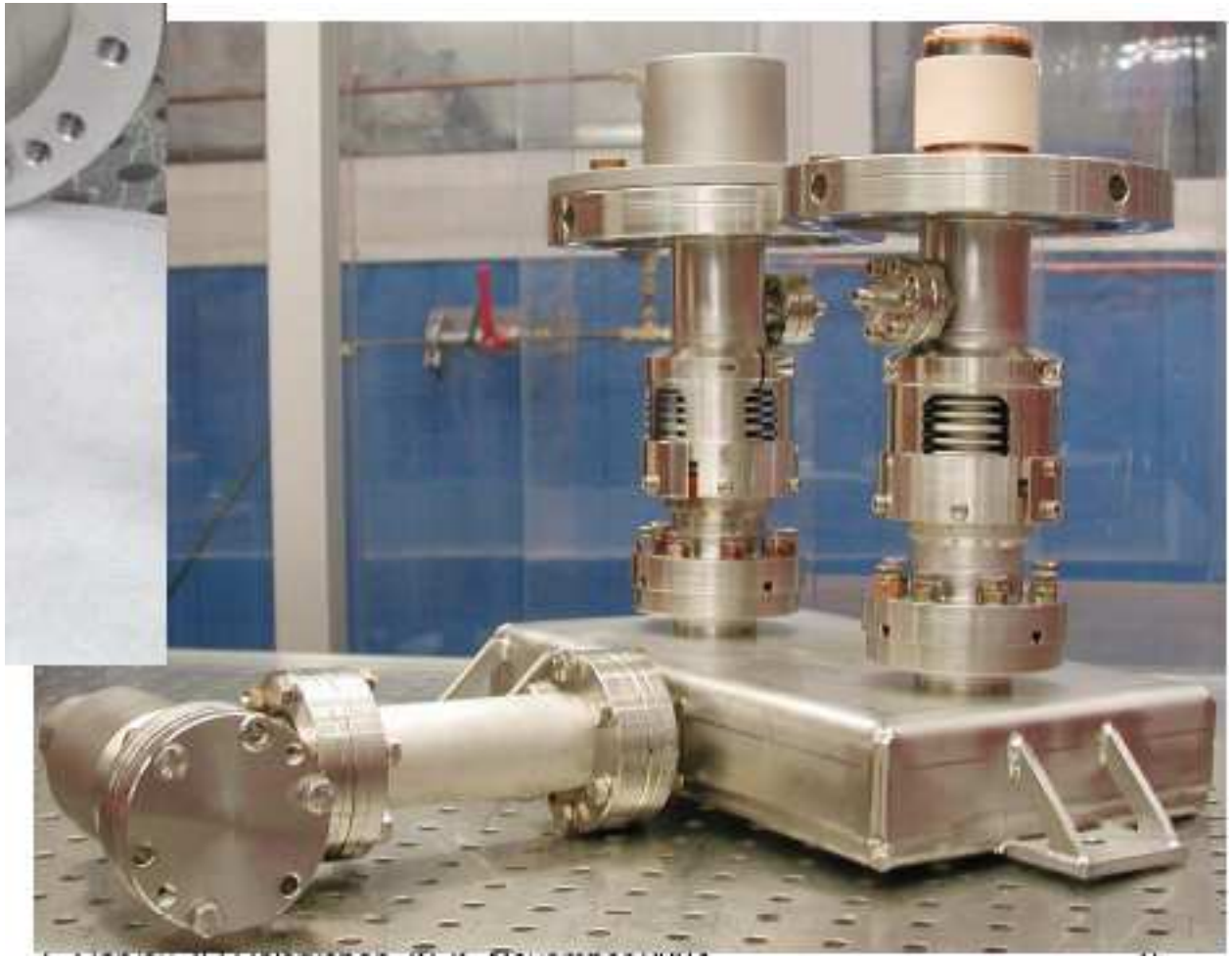

Assembly of cold part in class 10 clean room

Wave-guide assembly

RF Coupler in Module

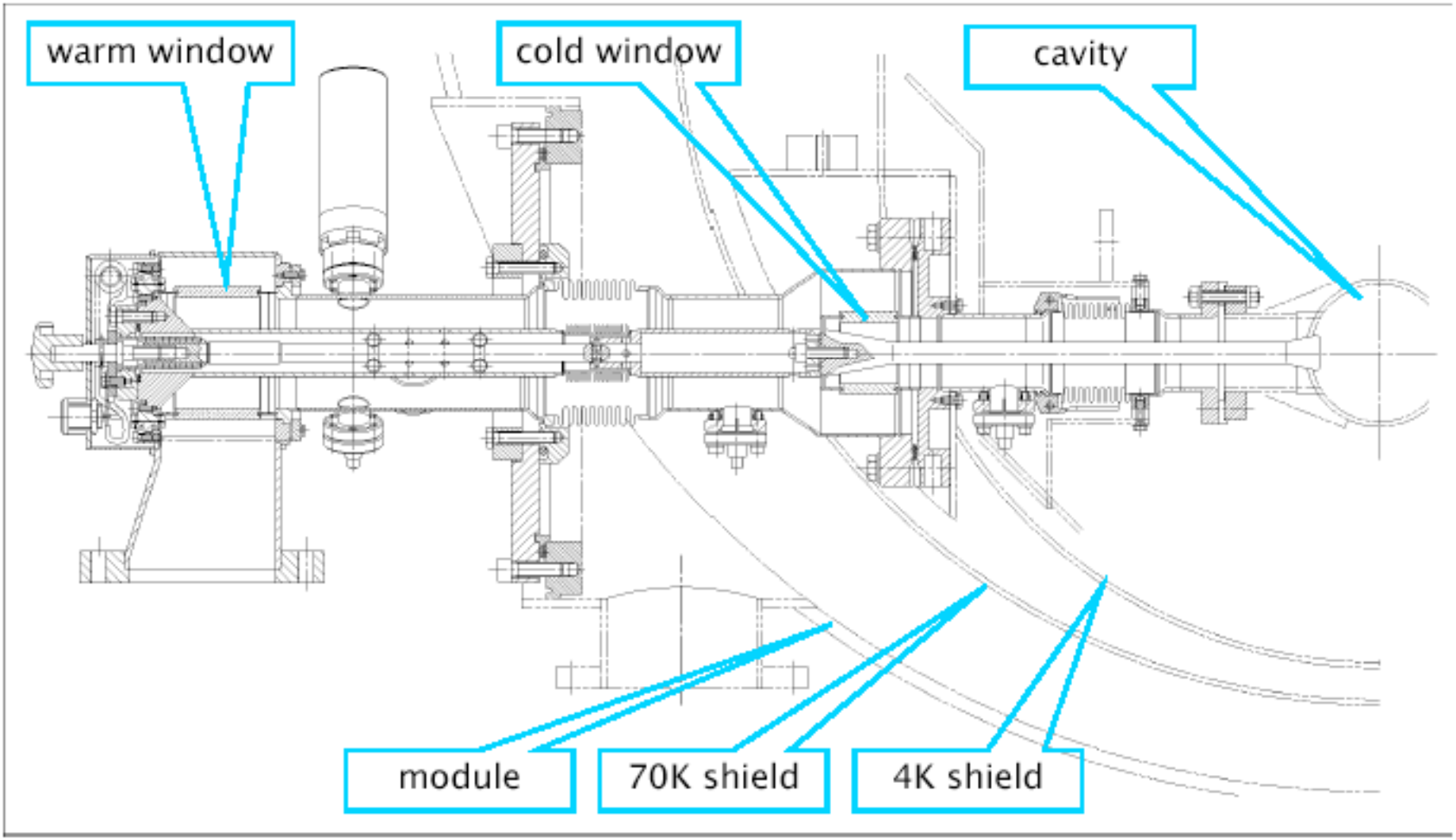

Coupler Mounted in the Cryomodule

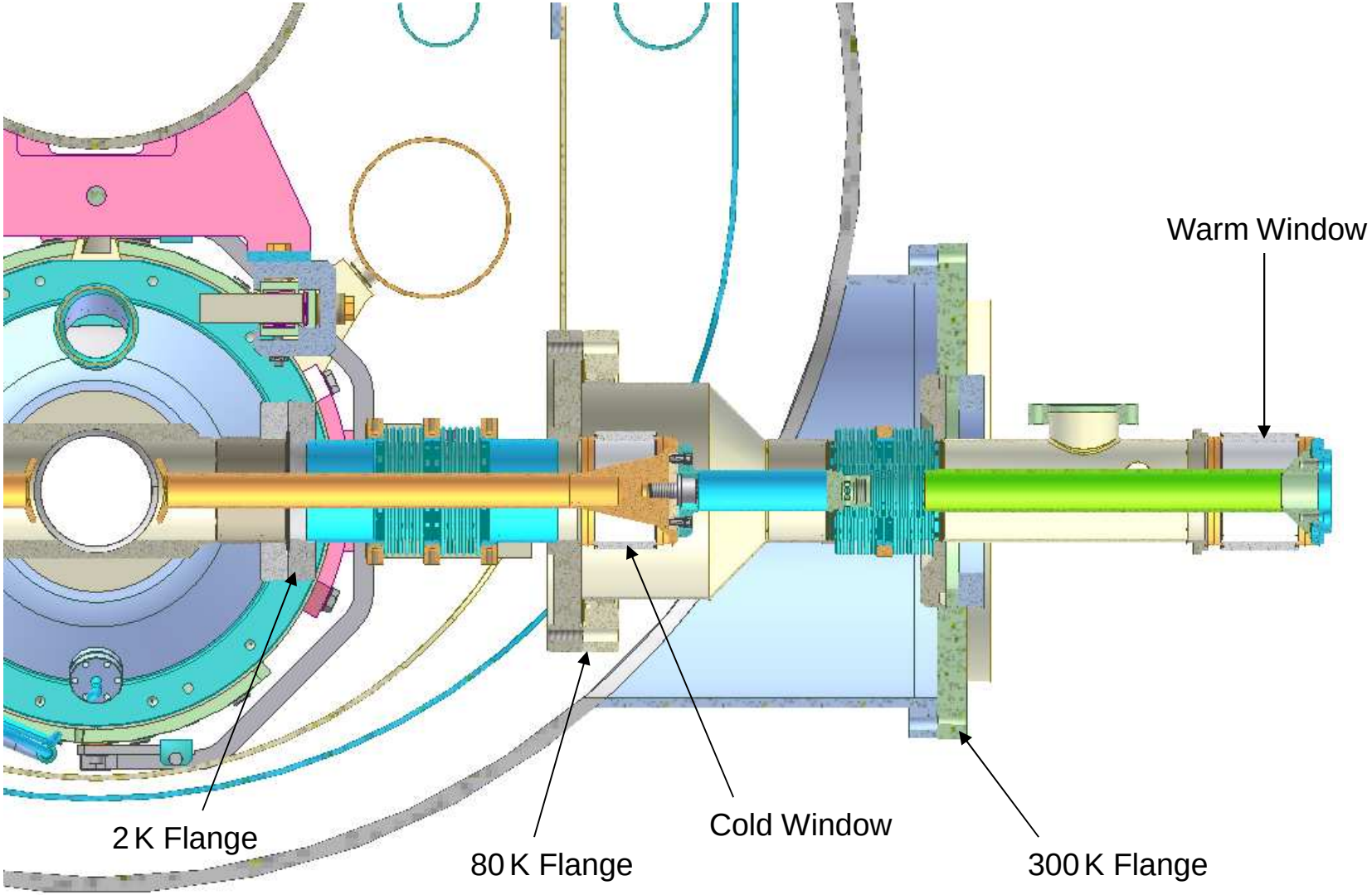

Cold Part of the Coupler

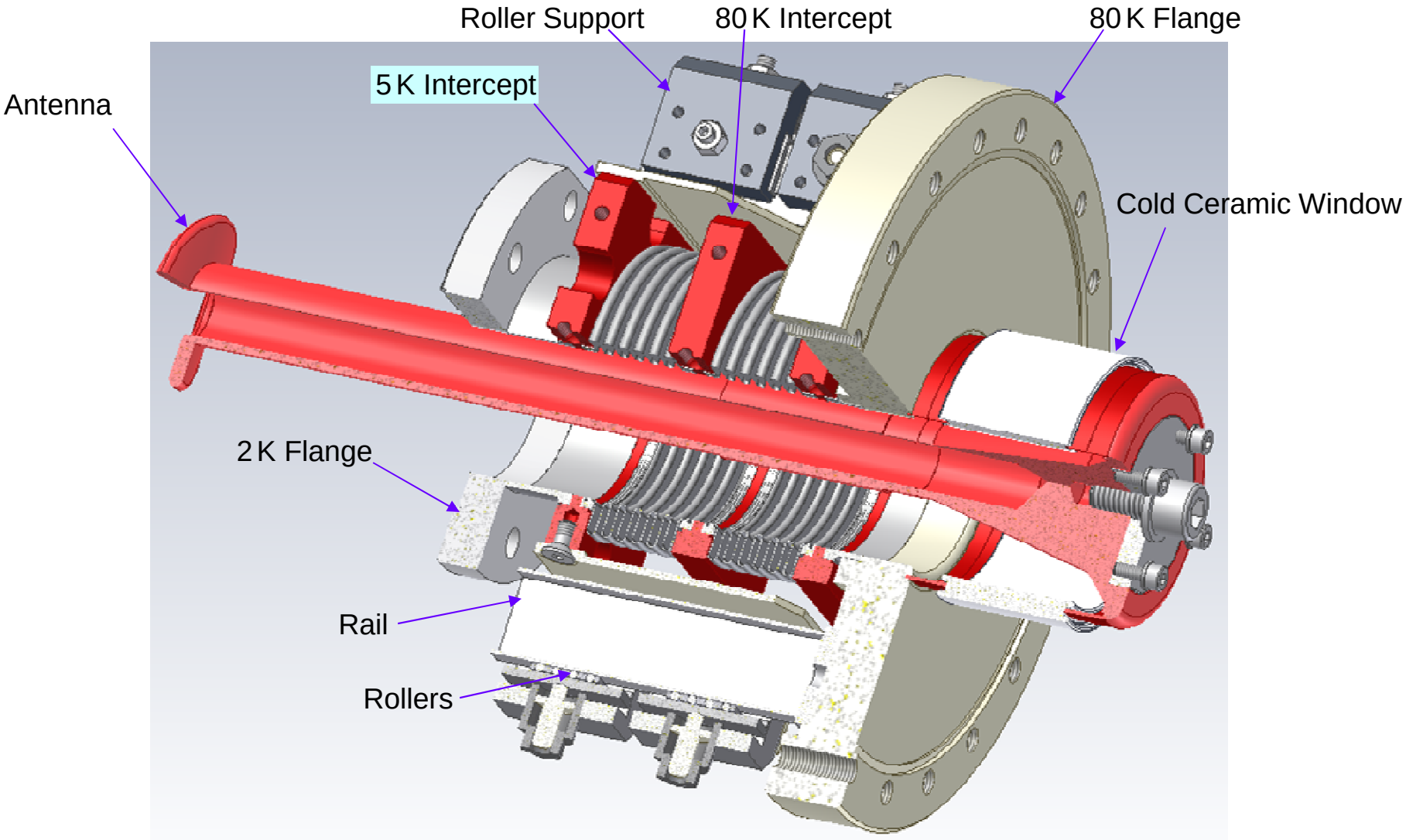

Assembling the Warm Part of the Coupler (1)

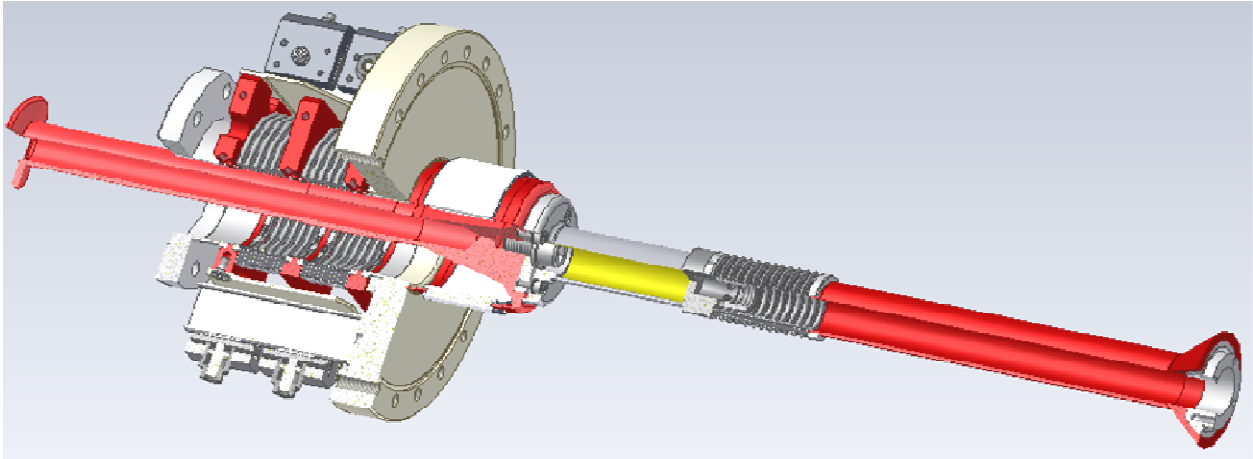

- Inner part of the warm coaxial line is attached

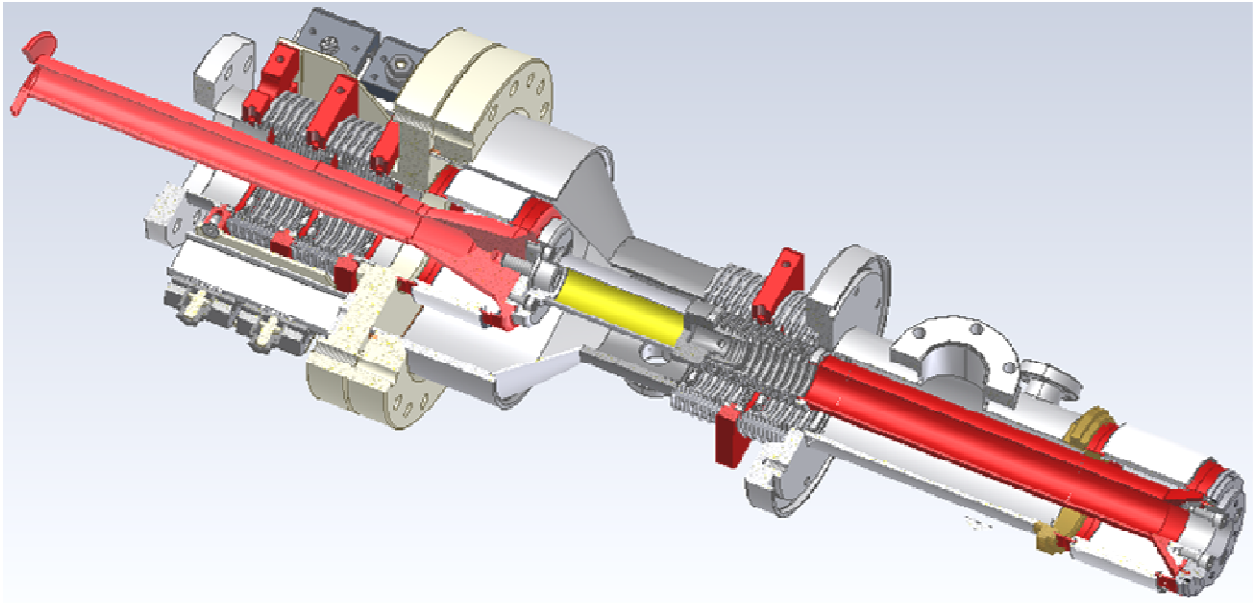

- Outer part of the warm coaxial line is attached

Assembling the Warm Part of the Coupler (2)

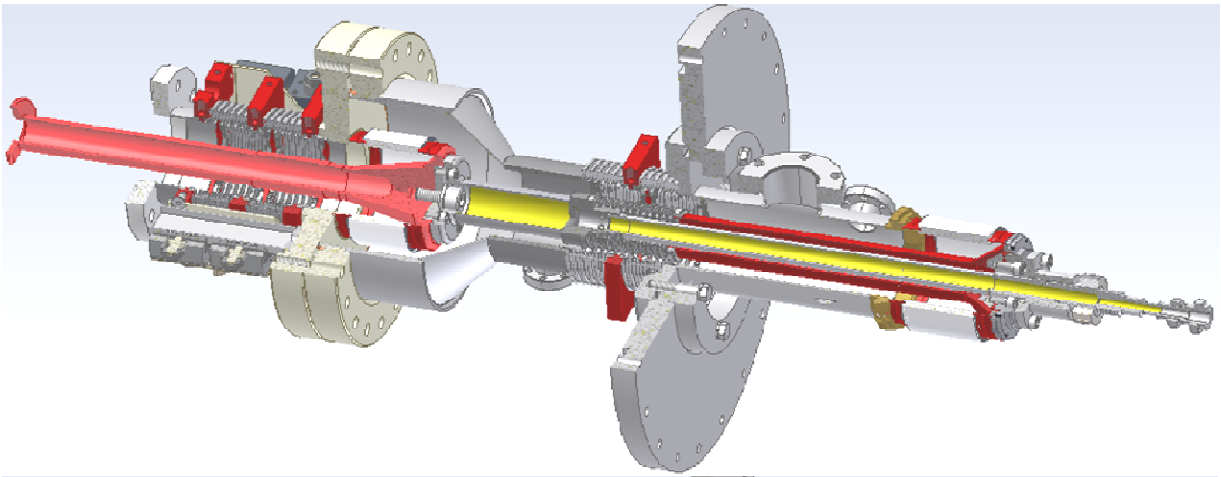

- Air cooling pipe and the big 300 K flange are mounted

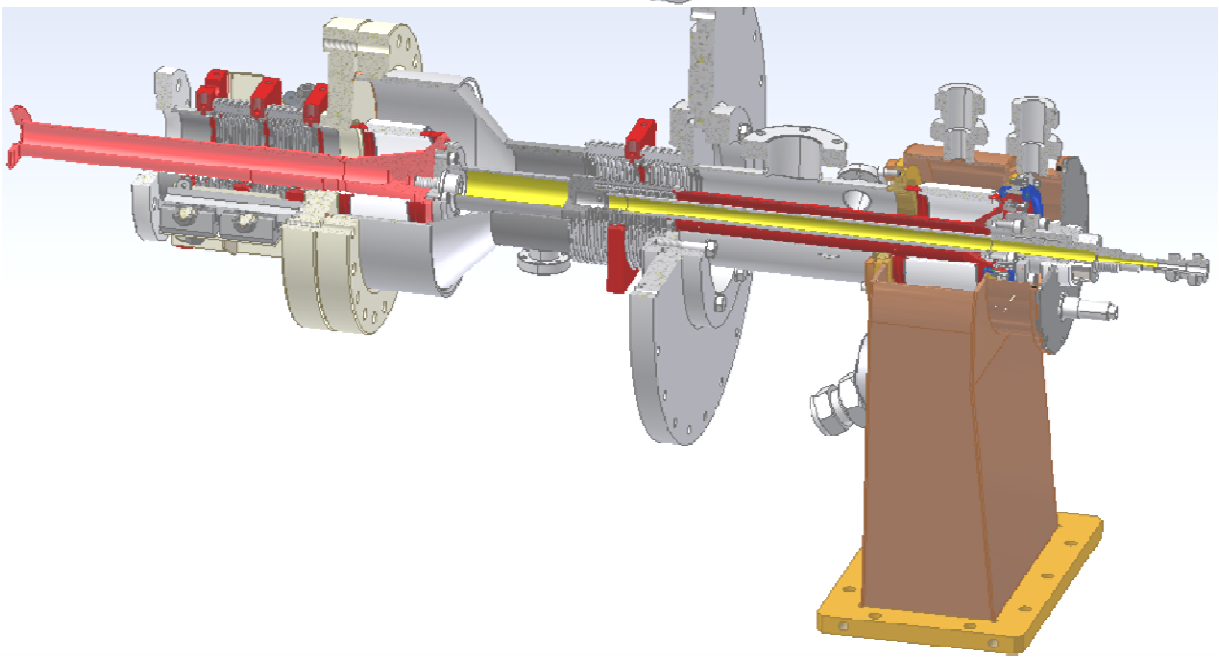

- Waveguide part is mounted

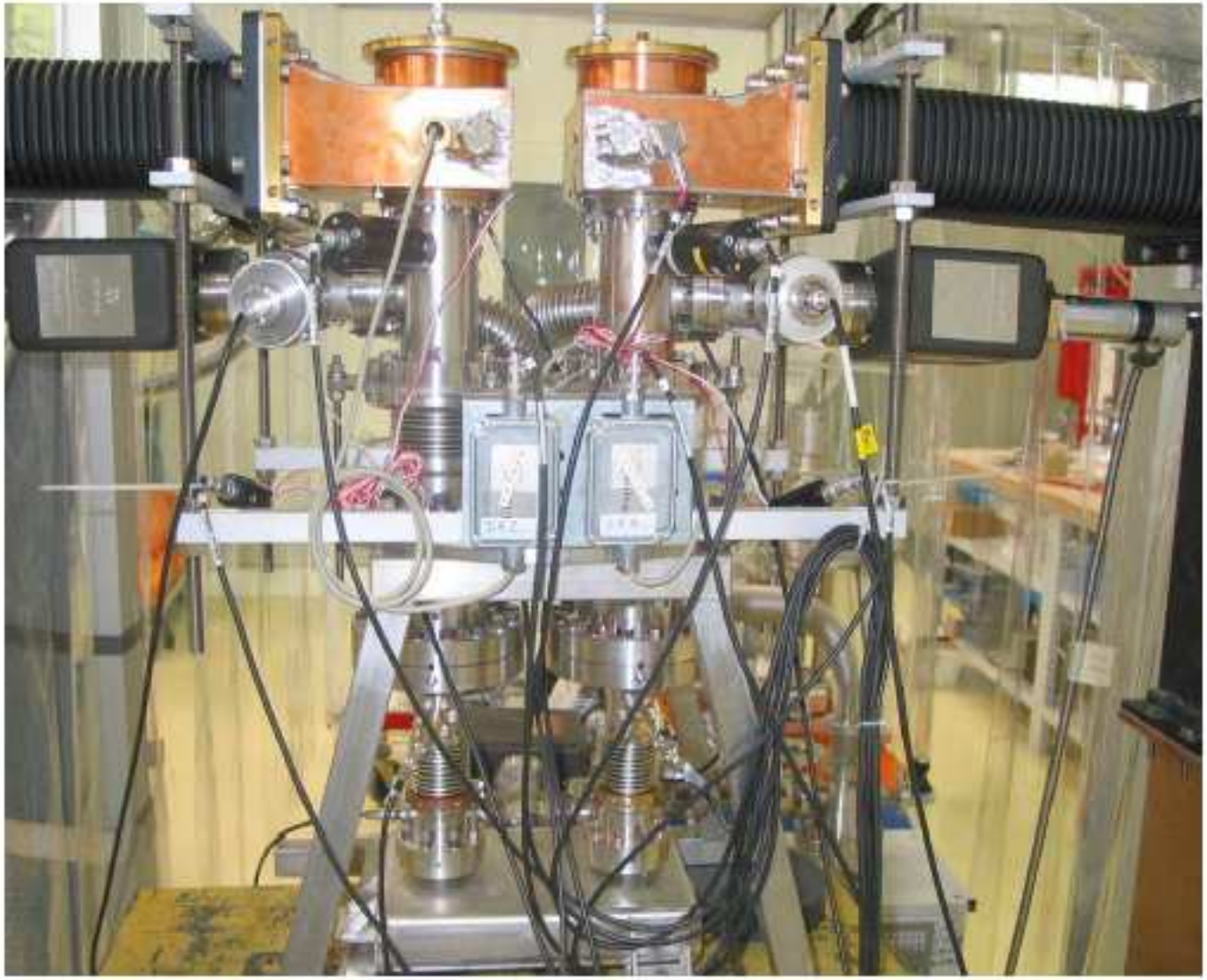

2 couplers under test at LAL-Orsay

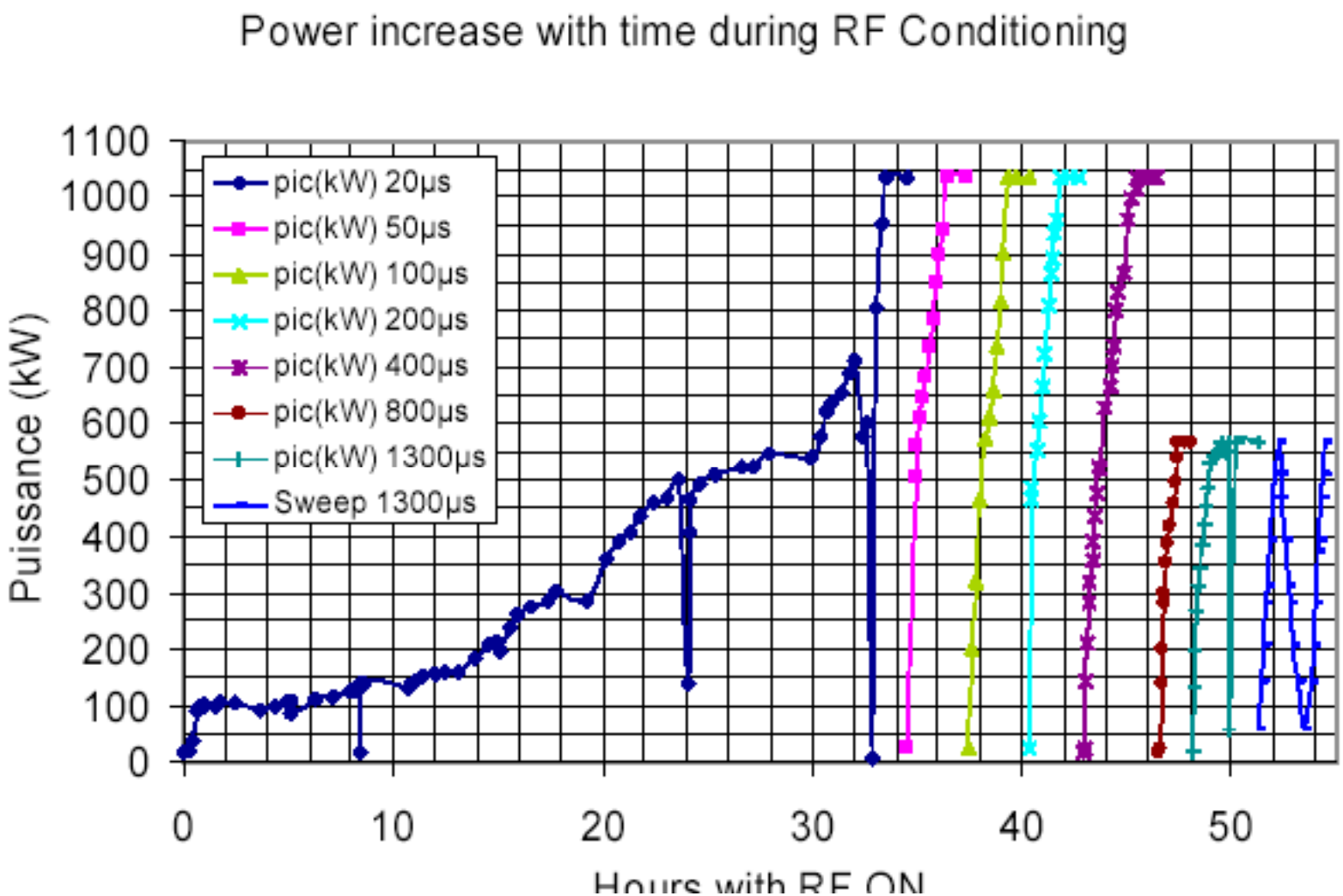
Power increase with time during RF Conditioning
Puissance (kW)
1100
1000
900
800
700
600
500
400
300
200
100
0
0
10
20
30
40
50
Hours with RF ON
pic(kW) 20µs
pic(kW) 50µs
pic(kW) 100µs
pic(kW) 200µs
pic(kW) 400µs
pic(kW) 800µs
pic(kW) 1300µs
Sweep 1300µs

Couplers for SC cavity operated with beam

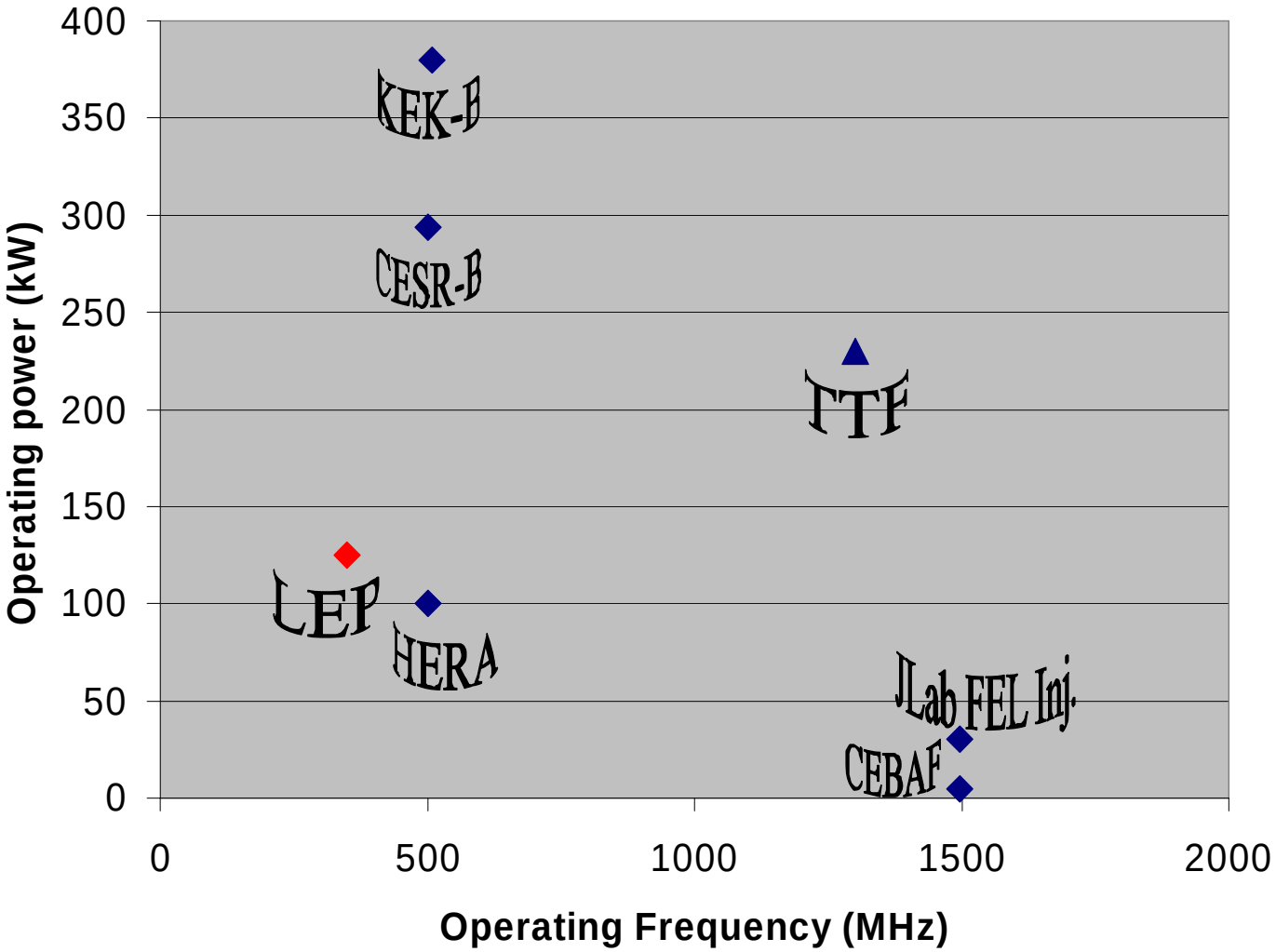

Couplers designed and or tested on stands

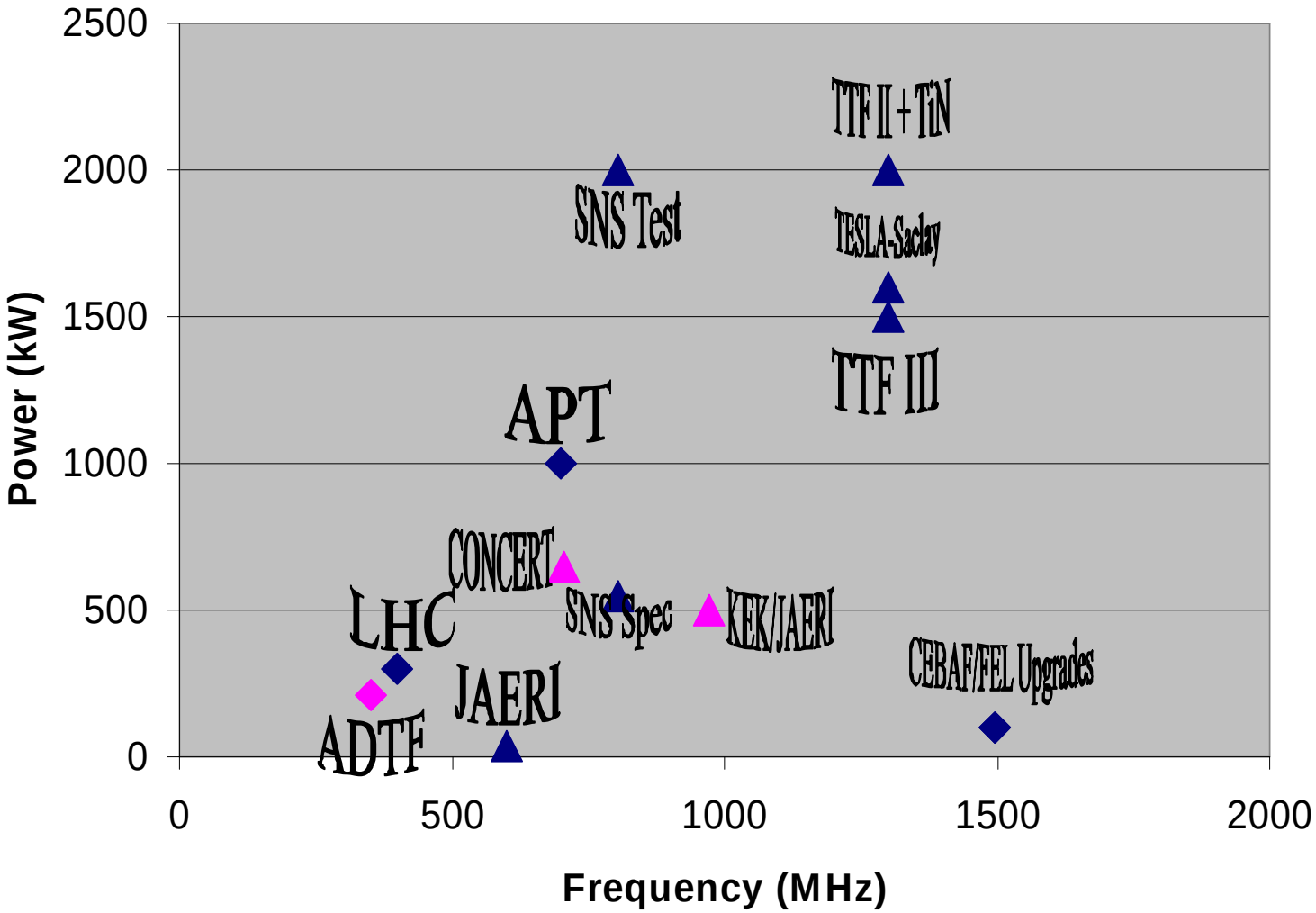

Couplers on the Cryomodule

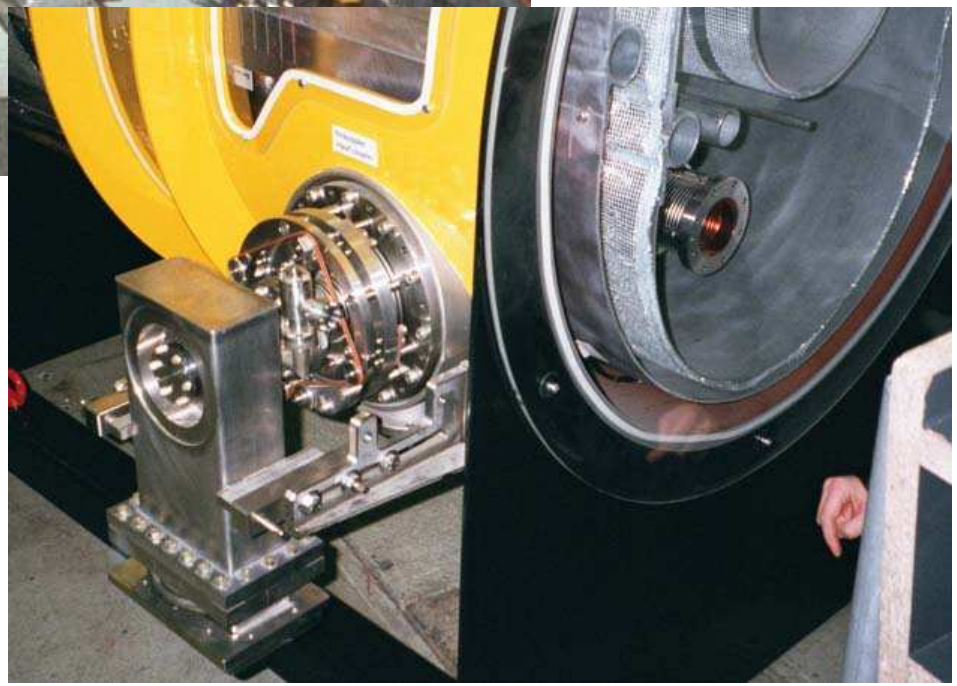

RF Couplers Performance – D.K.

- Total of 40 RF power couplers connected to the super-conducting cavities in the VUV FEL linac, eight in a module.
- All couplers in the VUV FEL linac were processed and operated up to the cavity performance limits.
- The parallel processing of 8, respectively 16, couplers on the modules is slower than that on the test stands or in the horizontal cryostat.
- RF power couplers were tested up to 1 MW of pulsed power at 1.3 ms pulse length, 2 Hz at the test stand.
- RF power couplers operated ~270,000 coupler*hours.
- The latest coupler design, TTF-III, has simplified assembly as well as providing better performance. Conditioning time is shorter.
- TTF-III couplers are tested together with cavities at gradients of 35 MV/m (600 kW) 5 Hz without degradation of cavity or coupler.

General conclusions from DESY experience

- Technical performance of TTF-III coupler is sufficient for X-FEL (and for ILC ??)
  - But, conditioning time is too long !
- Simplified technical interlock is desirable
- Alignment has been problematic – need simplified assembly
- In-situ bake-out possibility would be nice
- Unit cost of TTF-III couplers is too high !!

Alignment Guides for Cold Part of the ERL Coupler

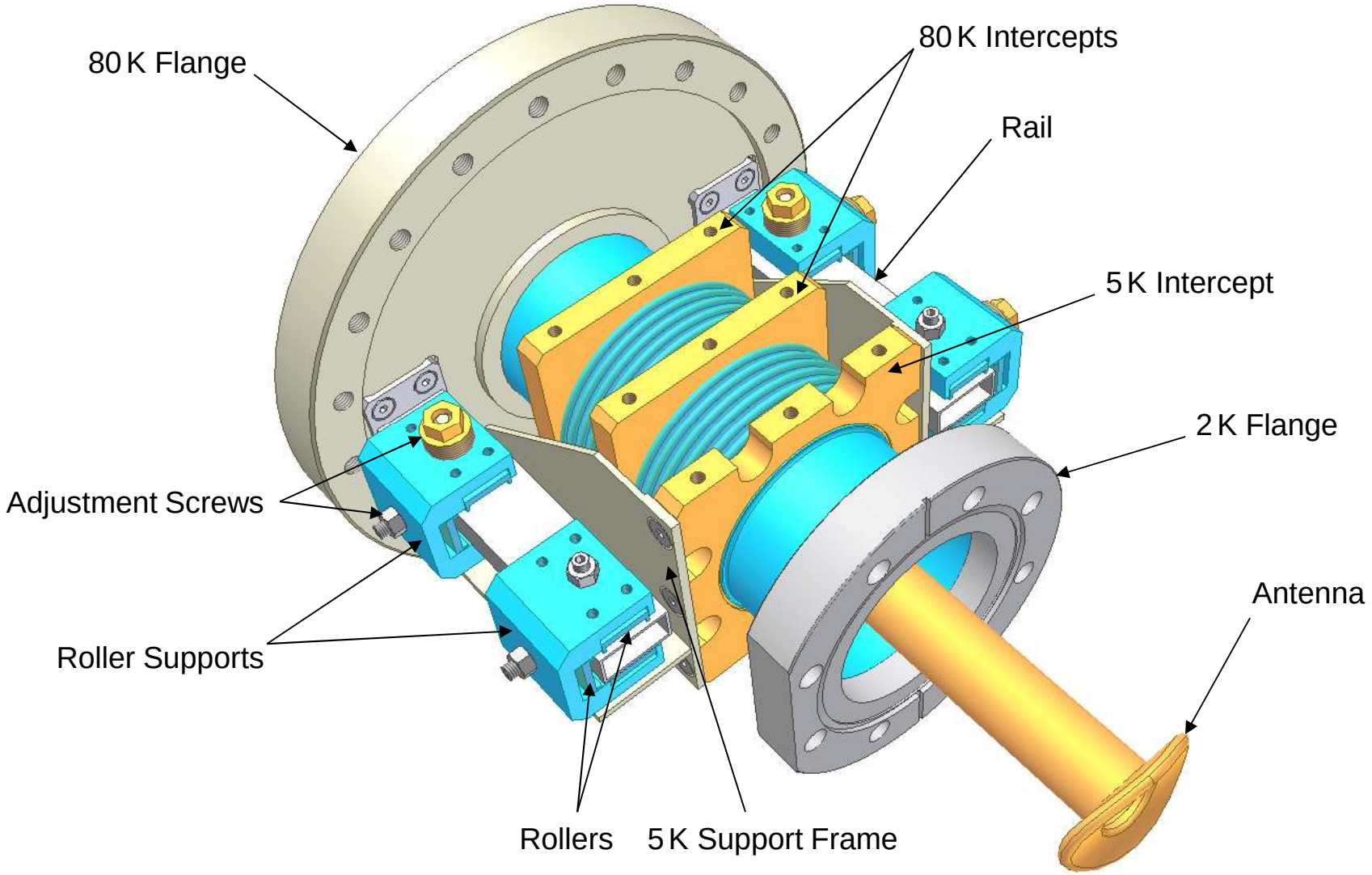

Linac Cavity Input Coupler: TTF4

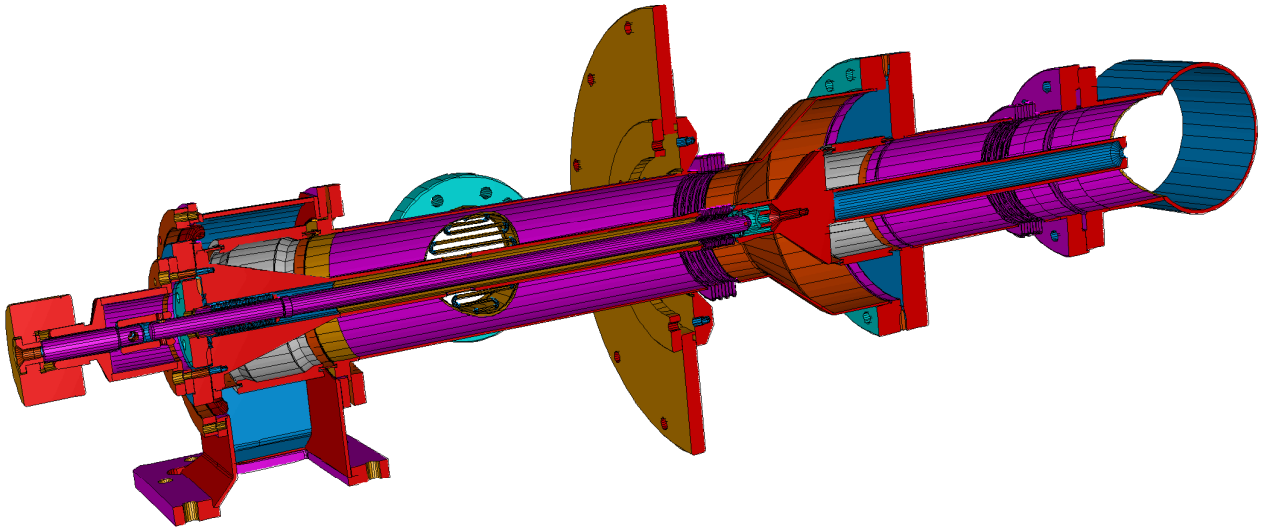

<u>The TTF4 coupler</u> is supposed to be multipactor-free

• 80 mm external diameter coupler for high power (~ 2 MW) operation. Large diameter to avoid multipactor regions.

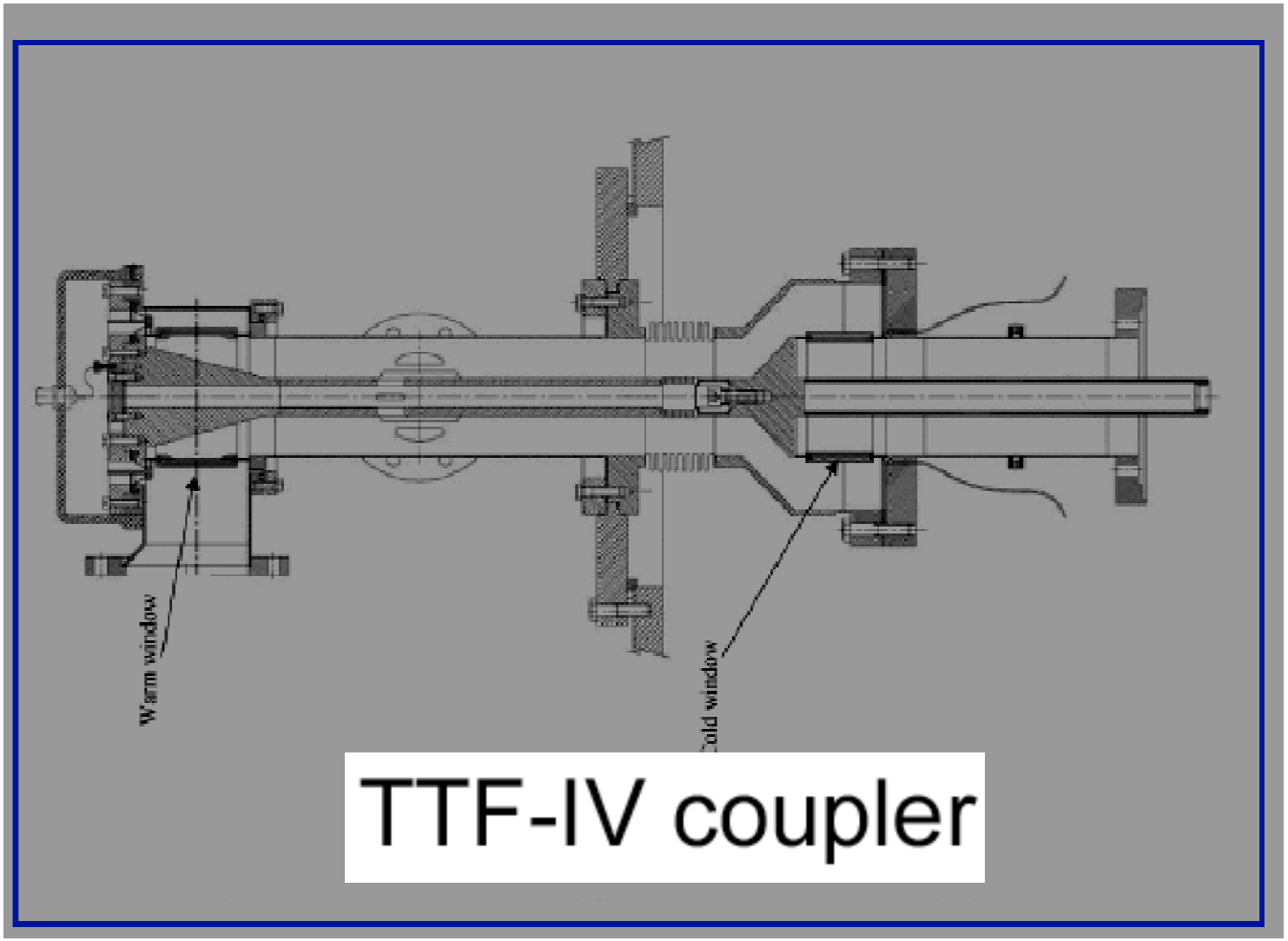

TTF-IV coupler

TTF-V Coupler for Superstructure

- Essentially = TTF-III "warm" part + 62 mmϕ "cold" part.
- Candidate coupler for a two x 9 cell ILC cavity

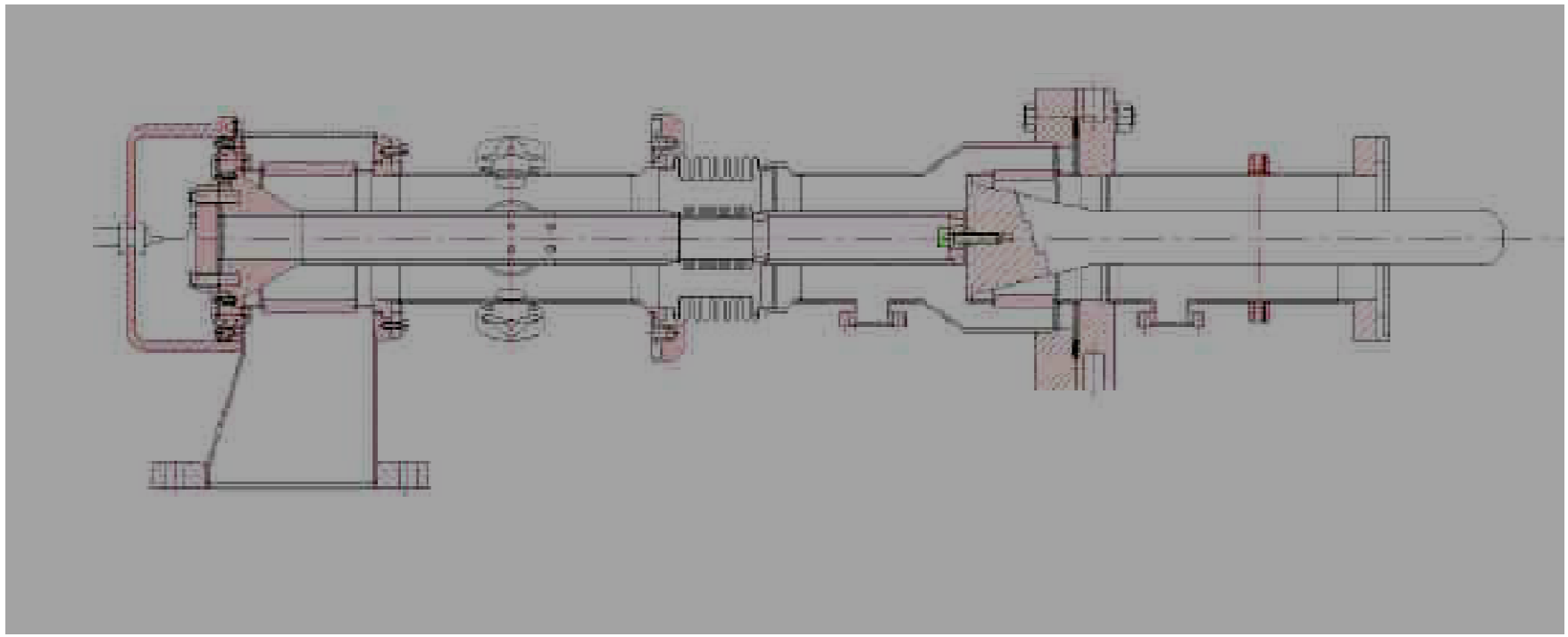

- Radically different from DESY coupler
  uses "thin" planar ceramic windows.

Warm transition is matched with reduced-height wave-guide.

Cold window matched with reactive impedance elements on inner co-ax.

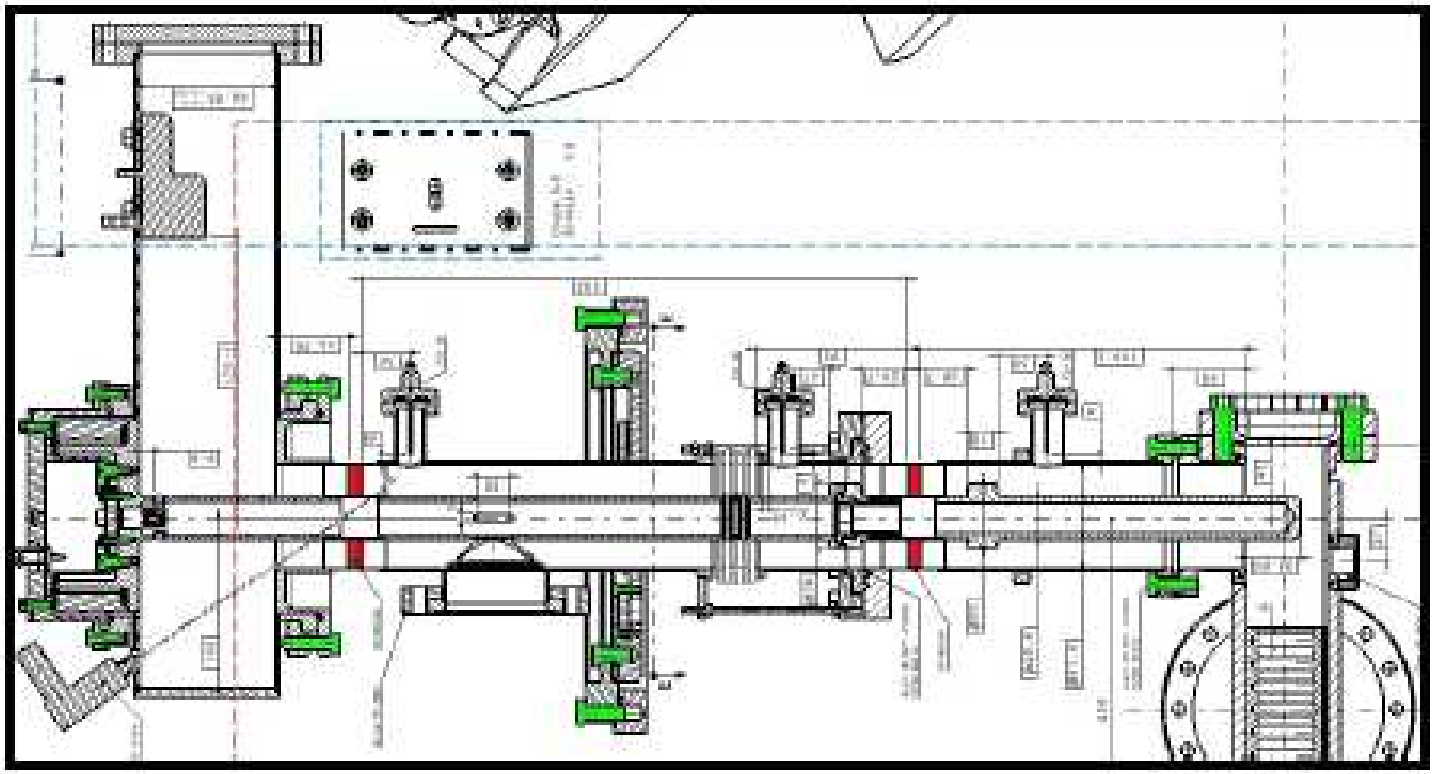

TW60 Coupler Proto-type

High Order Mode Couplers

- Remove HOM power,
- Damp HOM before next bunch
- Reject fundamental mode

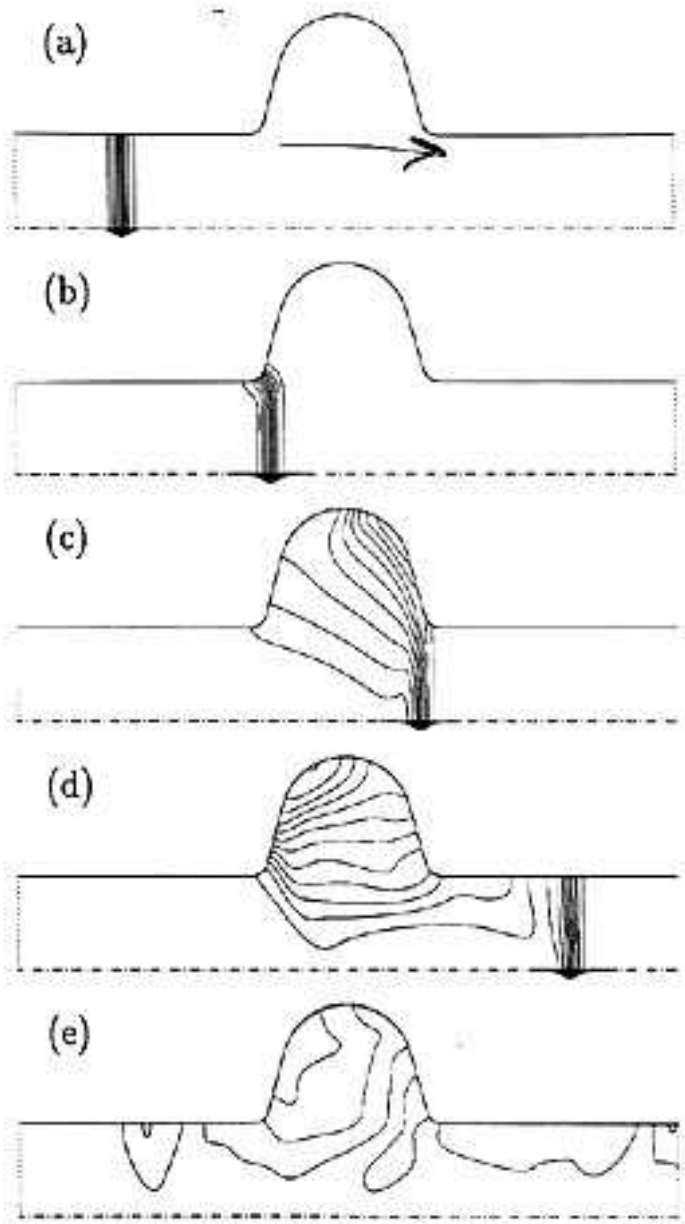

monopole single passage losses
TESLA-TDR

$f_{rep} = 5$ Hz
$T_{HF} = 0.95$ ms

a) Collider (500GeV)

$\sigma_{bunch} = 400\ \mu m$
$N_{bunch} = 2820$
$q_{bunch} = 3.2$ nC (9.5 mA)

losses per module (12x9cells):

P =	23.3 W
$P(f >$ 5 GHz) =	17.4 W
$P'(f >$ 10 GHz) =	12.7 W
$P'(f >$ 20 GHz) =	8.1 W
$P'(f >$ 50 GHz) =	3.0 W
$P'(f >$100 GHz) =	0 .7 W

b) FEL

$\sigma_{bunch} = 25\ \mu m$
$N_{bunch} = 11315$
$q_{bunch} = 1.0$ nC (12 mA)

losses per module (12x9cells):

P' =	14.2 W
$P'(f >$ 5 GHz) =	11.5 W
$P'(f >$ 10 GHz) =	9.3 W
$P'(f >$ 20 GHz) =	7.1 W
$P'(f >$ 50 GHz) =	4.7 W
$P'(f >$100 GHz) =	3.1 W

monopole single passage losses (TDR supplement)

$$P_{sp} = q^2 k'_{\parallel} L_{\text{length}} f_{\text{rep}} N_{\text{particles/pulse}} = 9.21\ \text{W}$$ per module

losses above f:

8.17 W	$f > 1.3$ GHz	~ 45 monopole modes (R. Wanzenberg, TESLA 2001-33)
7.55 W	2.45 GHz	
7.54 W	2.76 GHz	
7.50 W	3.67 GHz	
7.48 W	3.83 GHz	
7.3 W	5 GHz	
6.3 W	10 GHz	
5.0 W	20 GHz	
3.4 W	50 GHz	
2.4 W	100 GHz	
0.4 W	750 GHz	to cavity walls

approximately (7.3 – 0.4) W can reach the absorber

Higher Order Mode Couplers

Fundamental theorem of beam loading

$$V_{n\,beam} = \frac{\omega}{4}\left(\frac{R}{Q}\right)_n q$$

$$P_{diss,\,HOM} = I_{beam} \quad V_{n,\,beam}$$

Better make

$$Q_{ext,\,n} = \frac{V_n^{\,2}}{\frac{R}{Q} * P_{hom,n}}$$

$$Q_{ext} < \omega\, t_{bunch}$$

HOM Couplers and Absorbers

what is a hom absorber ?

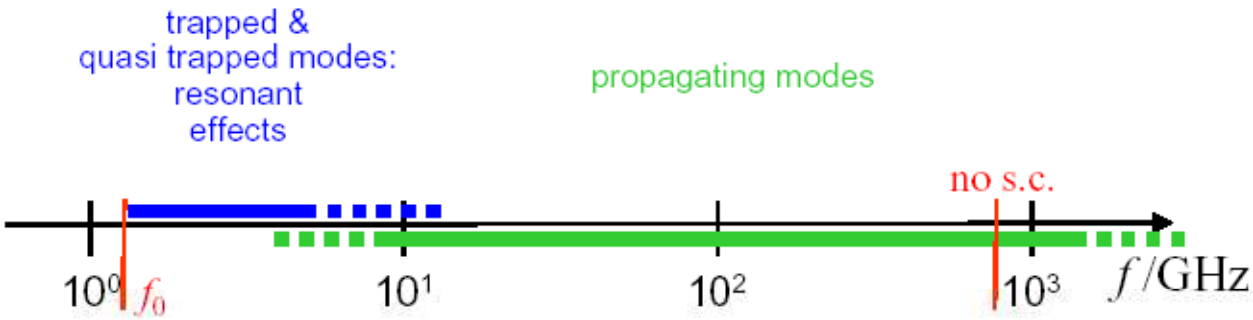

HOM couplers

coax to warm load

HOM absorbers

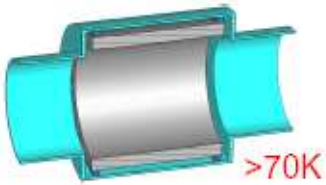

no transmission lines or waveguides
⇒ absorber at temperature level with
good cryo efficiency

absorbers in interconnections between modules
T > 70K

Remove Higher Order Modes

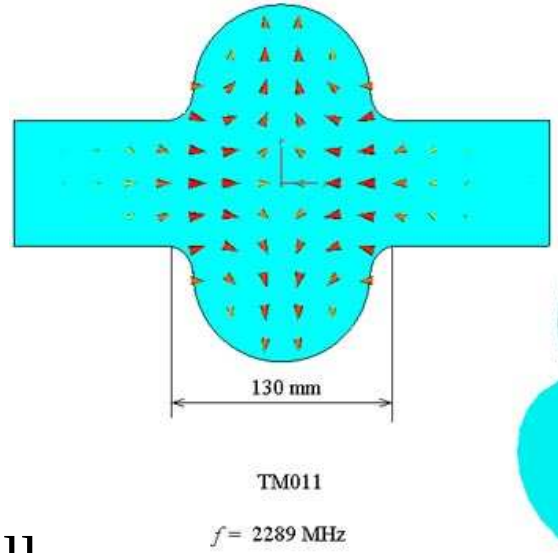

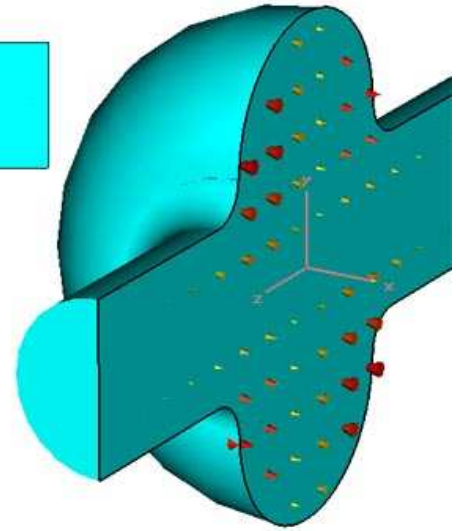

Don't penetrate cell
Field enhancement, multipacting

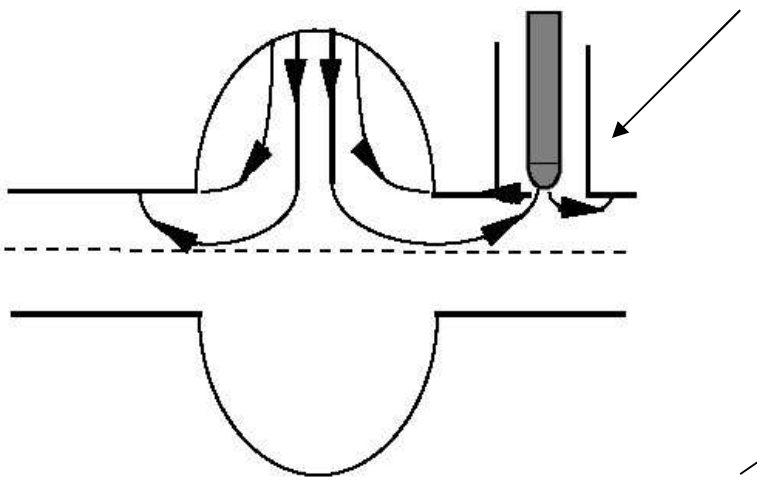

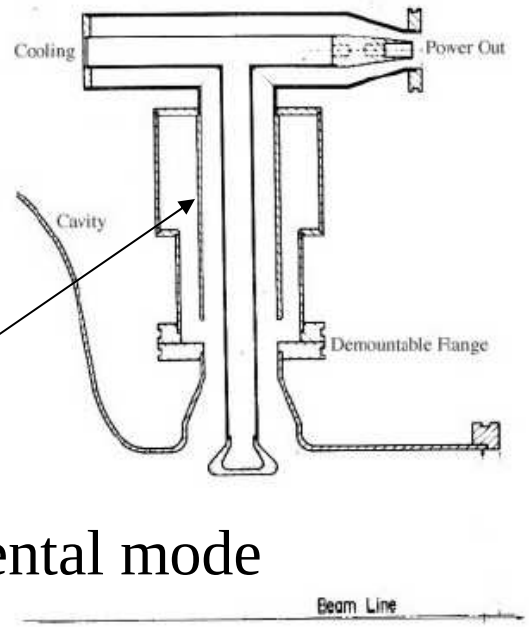

Reject fundamental mode

CEBAF/Cornell

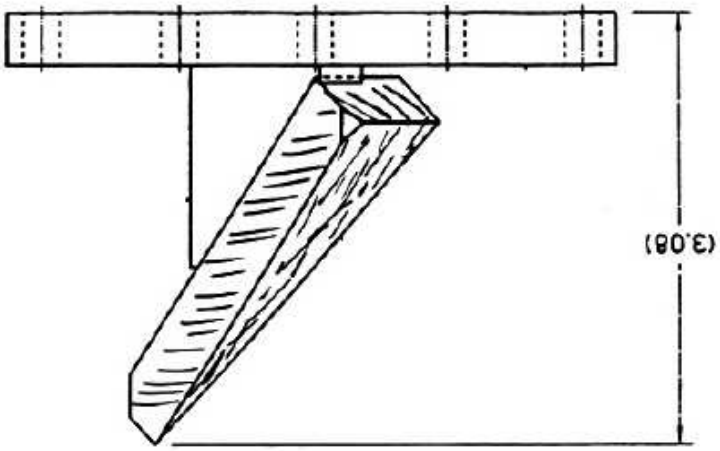

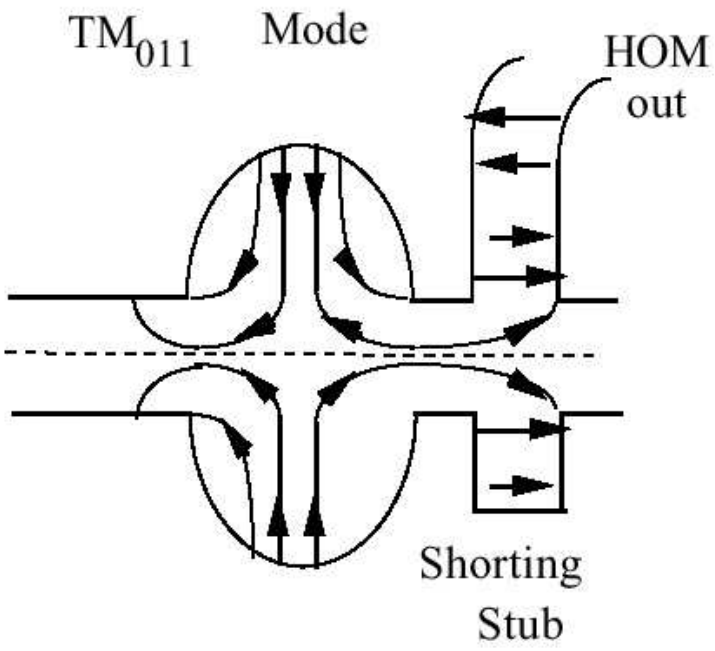

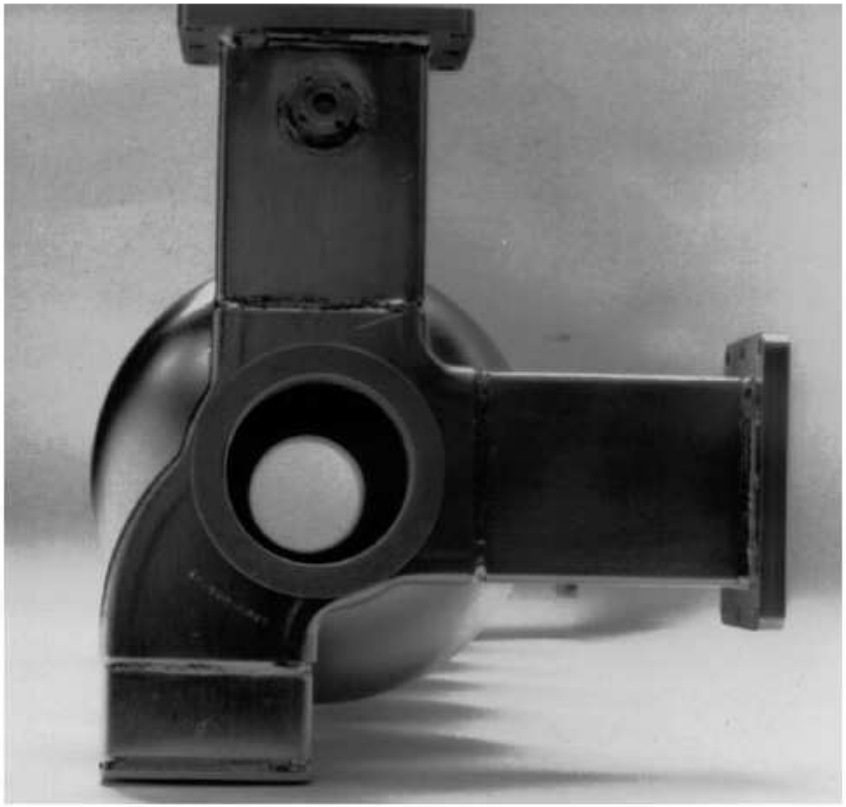

Avoid this !

If you come across
Trapped mode
Change cell geometry
Introduce asymmetries

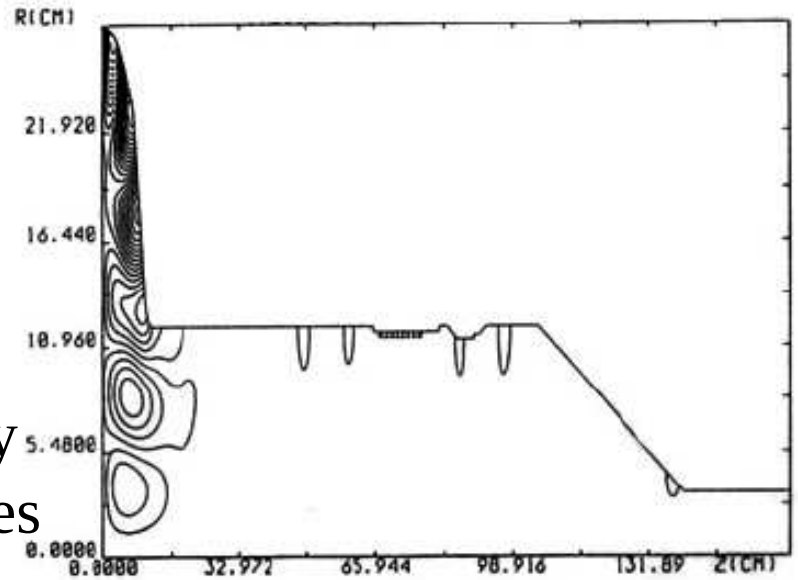

(a)

Trapped

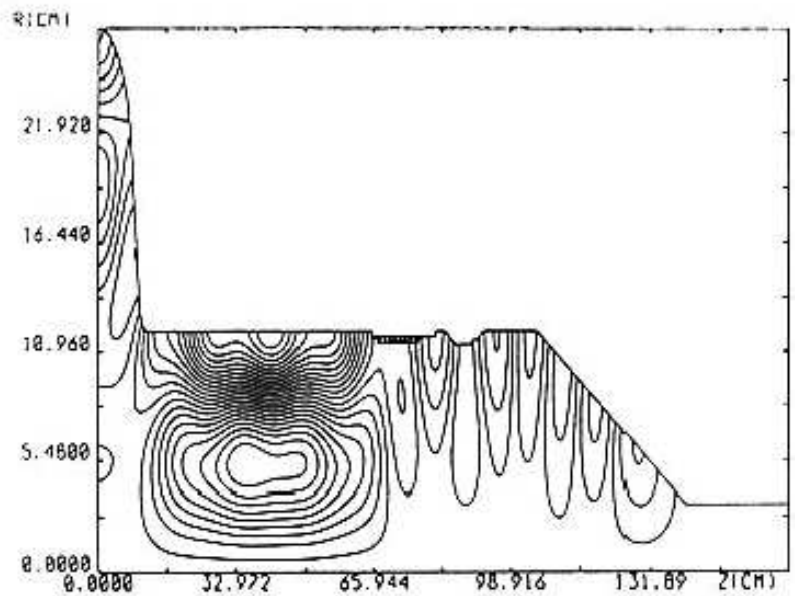

(b)

Propagating

Coaxial HOM filter/coupler

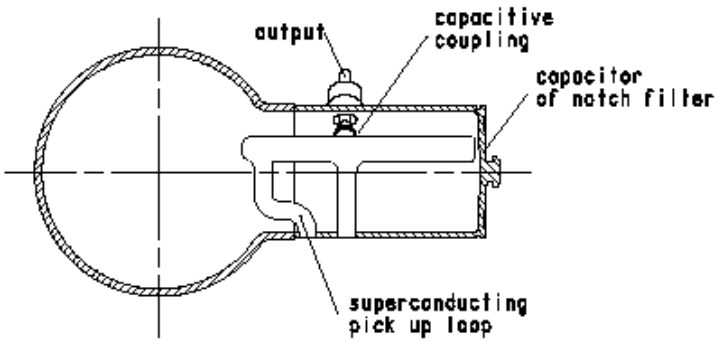

a)

b)

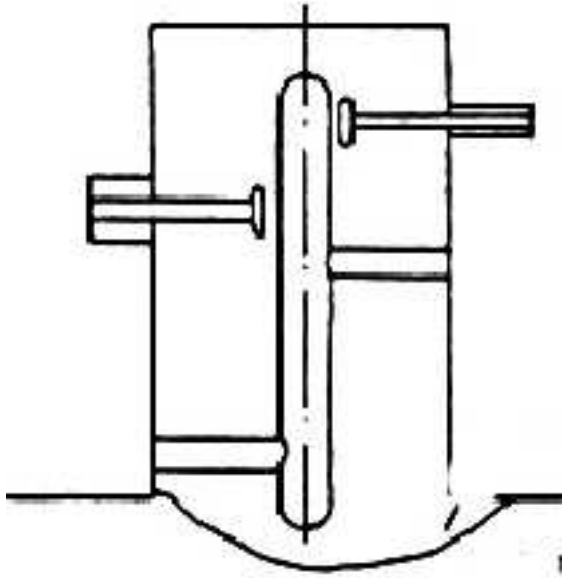

ion

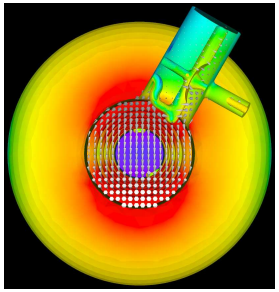

B

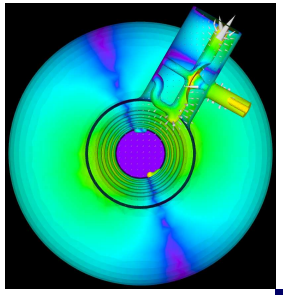

E

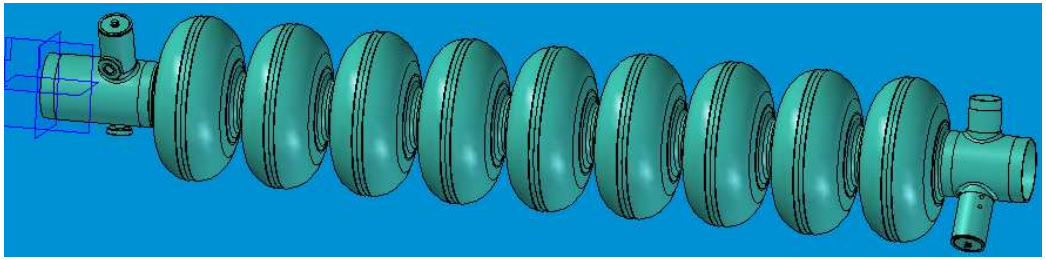

SLAC

FNAL

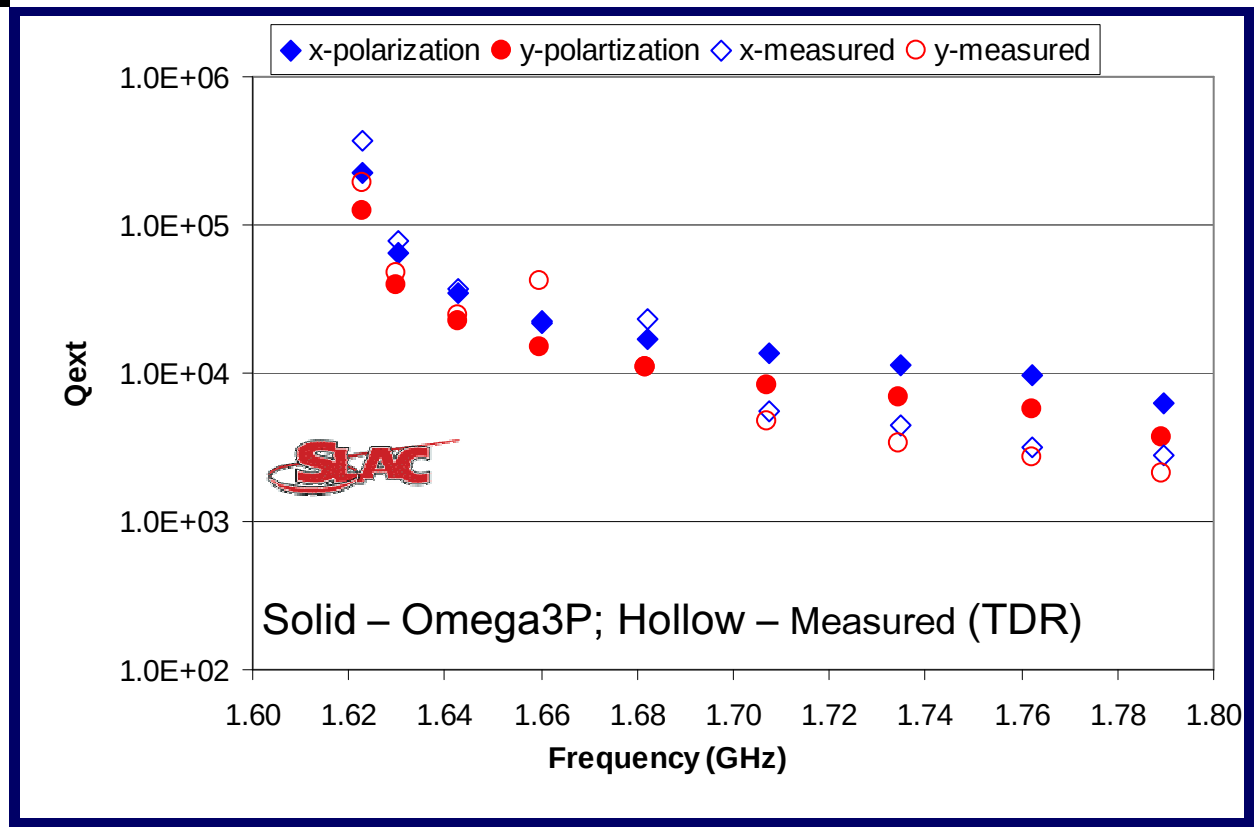
x-polarization
y-polartization
x-measured
y-measured
1.0E+06
1.0E+05
1.0E+04
1.0E+03
1.0E+02
Qext
1.60
1.62
1.64
1.66
1.68
1.70
1.72
1.74
1.76
1.78
1.80
Frequency (GHz)
Solid – Omega3P; Hollow – Measured (TDR)

Damping vs Requirements

Beam Dynamics limit $Q_{ext} \leq 10^5$

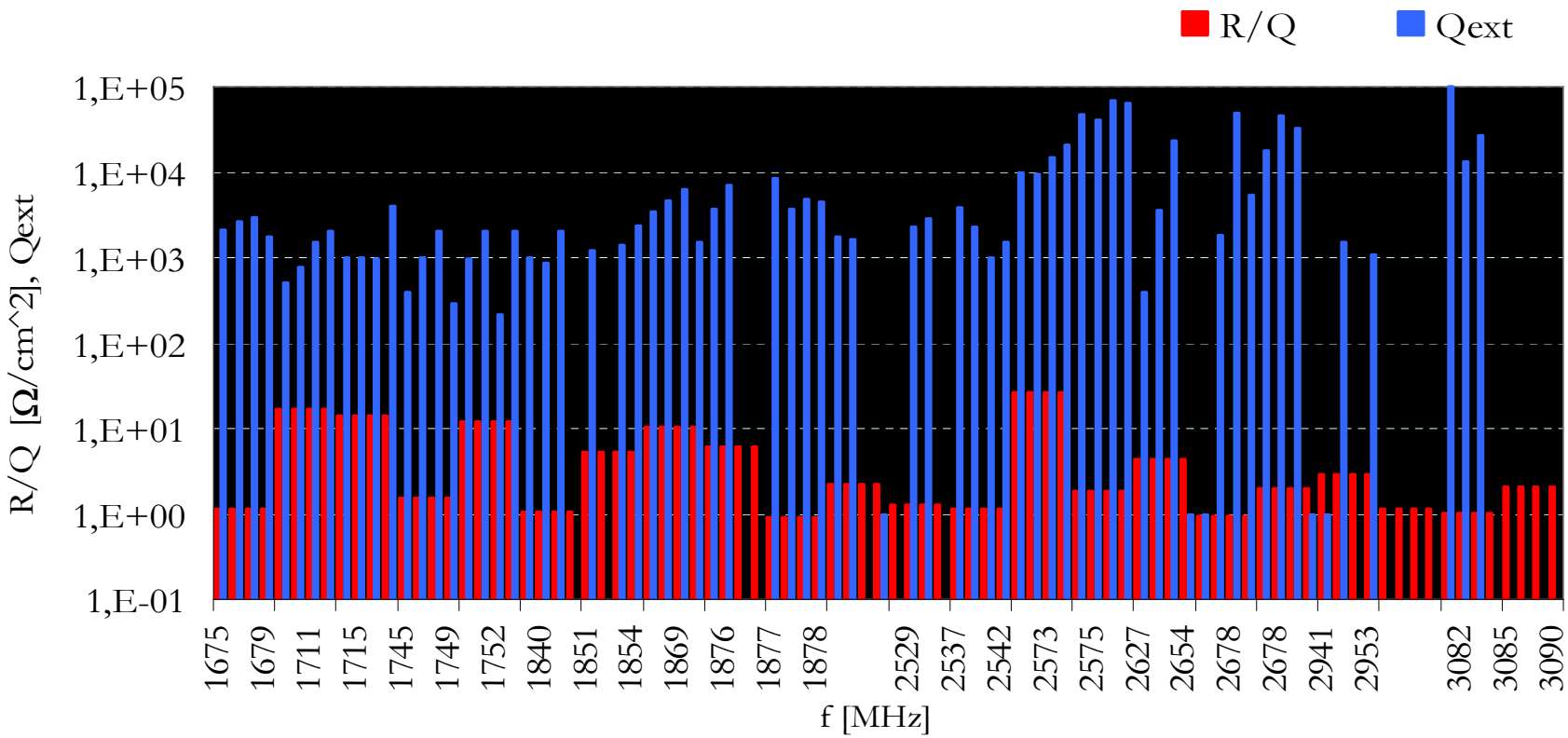

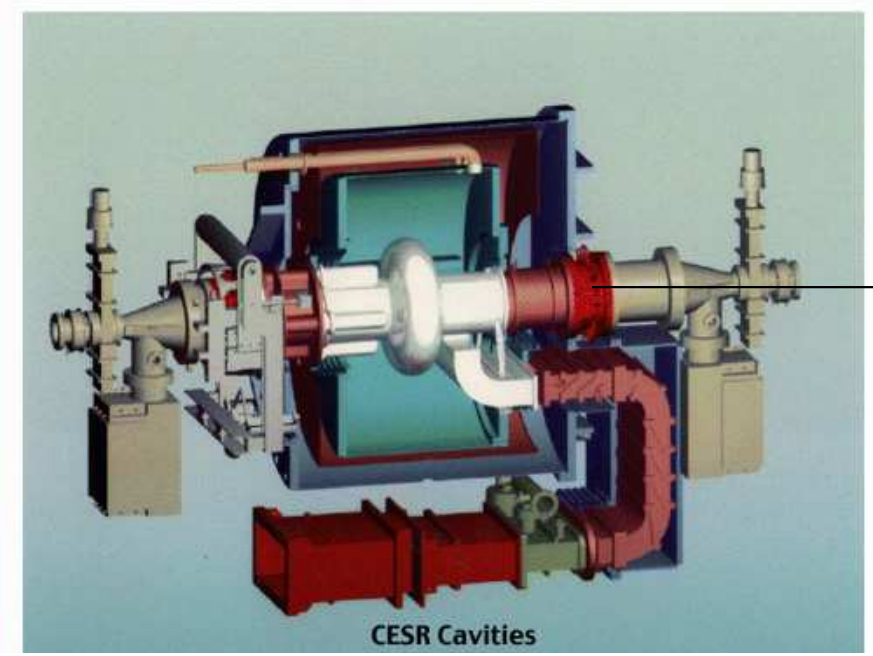

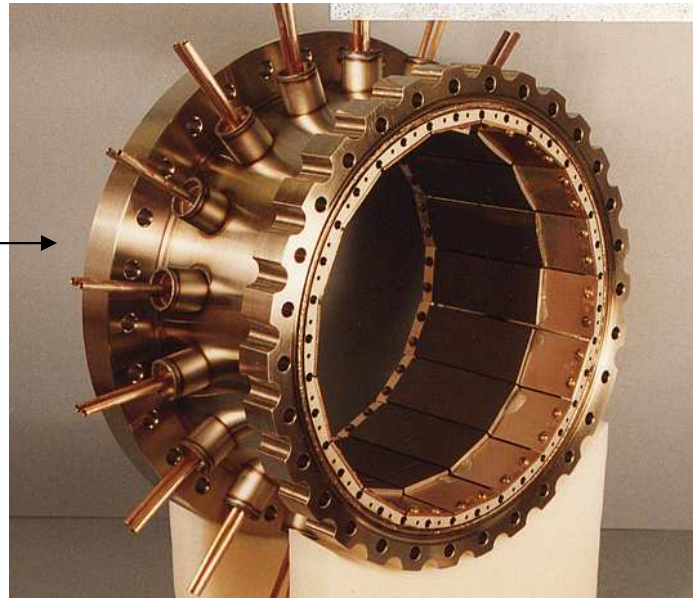

HOM Absorbers

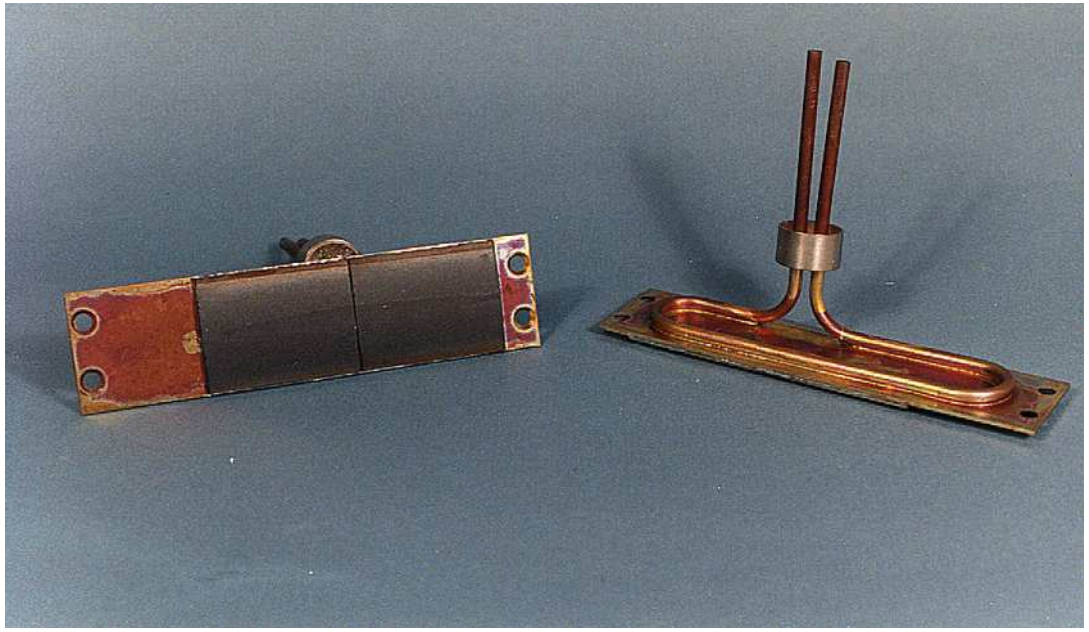

R/Q * Q Including Ferrite Load

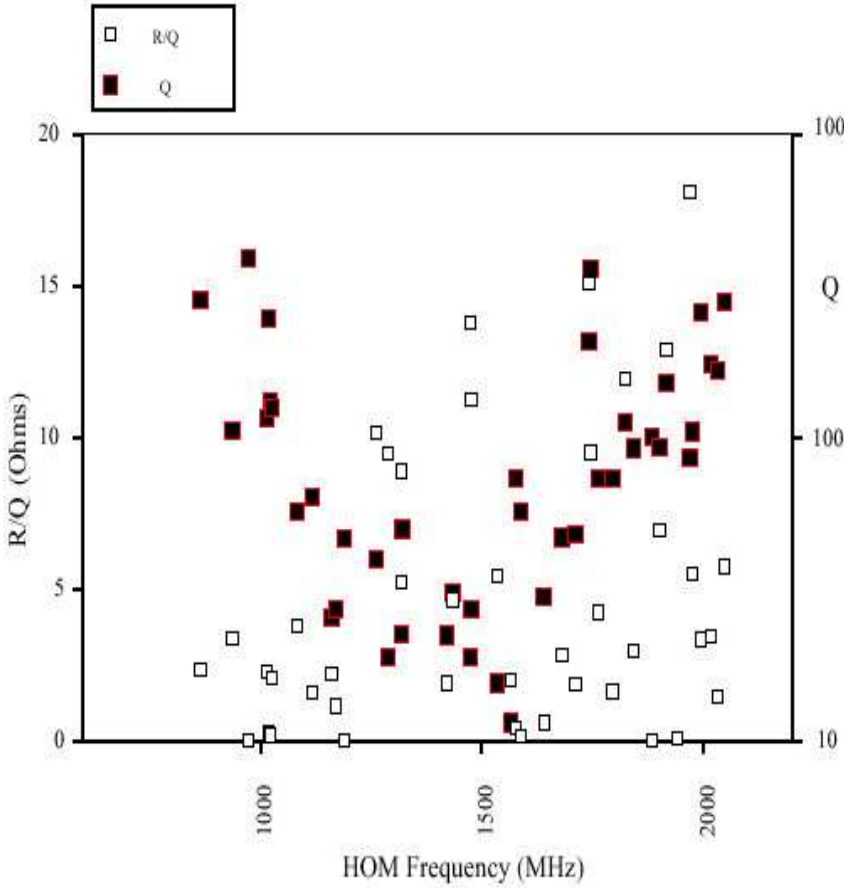

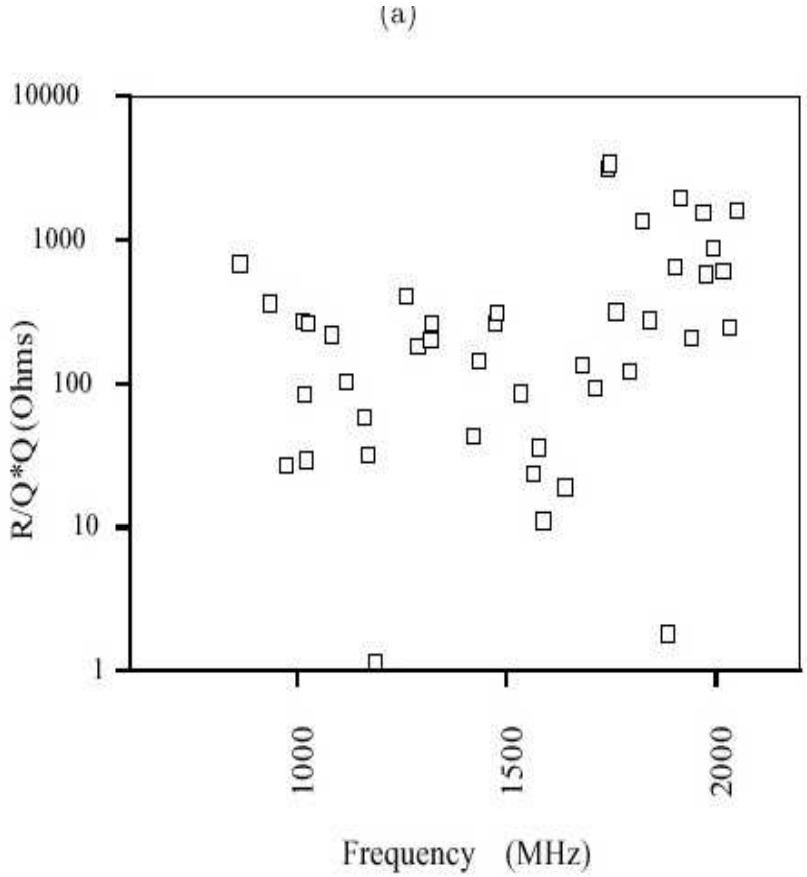

For very high current (amp) applications
Q values need to be reduced to 100

Frequency Tuner

Objectives:

- **Tuning range: ± 1mm**
- **Resolution: ≤ 1 Hz/step**
- **Drive: Stepping motor and piezo (± 100 Hz sufficient, ± 300 Hz desirable)**
- **High stiffness, including drive (low microphonics detuning)**
- **High reliability; drive will move continuously**
- **Drive (motor and piezo) outside of cryostat desirable**

Tuning for Right Frequency

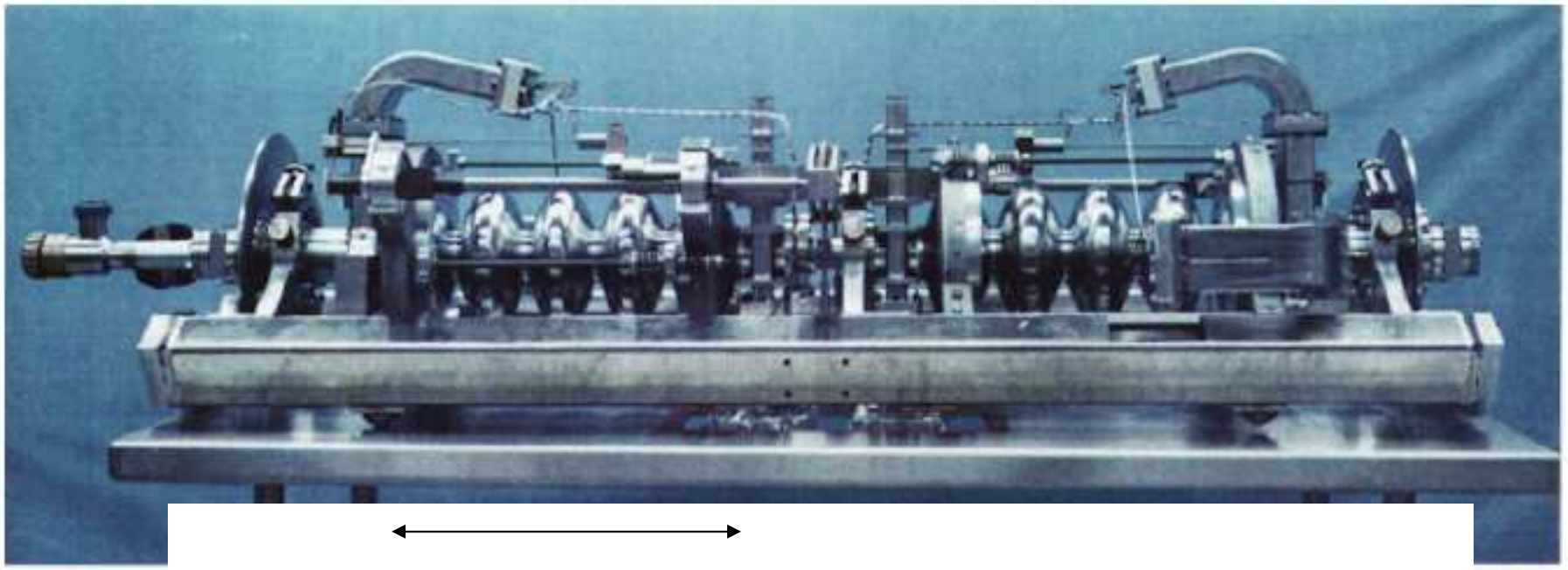

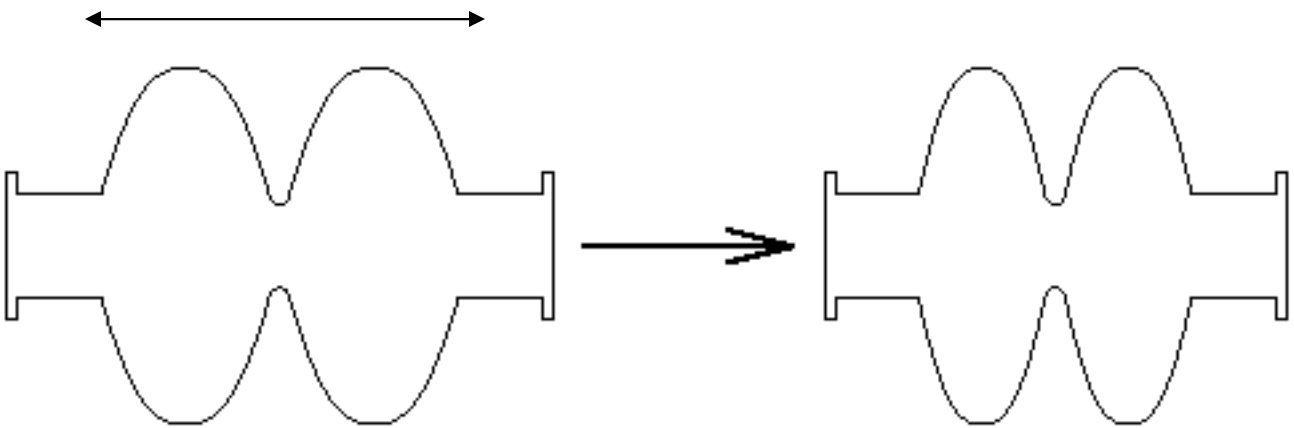

TESLA

Piezo-assisted Tuner

- To compensate for Lorentz force detuning during the 1 ms RF pulse
  Feed-Forward
- To conteract mechanical noise, "michrophonics"
  Feed-Back

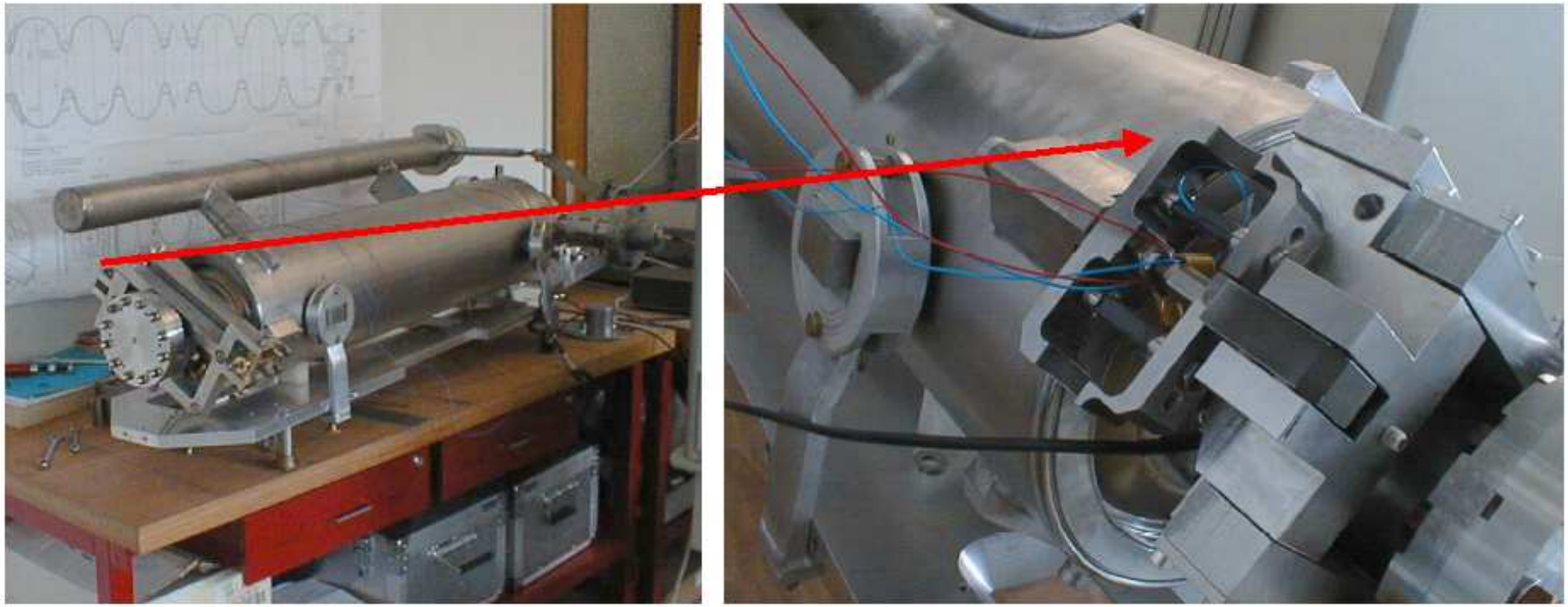

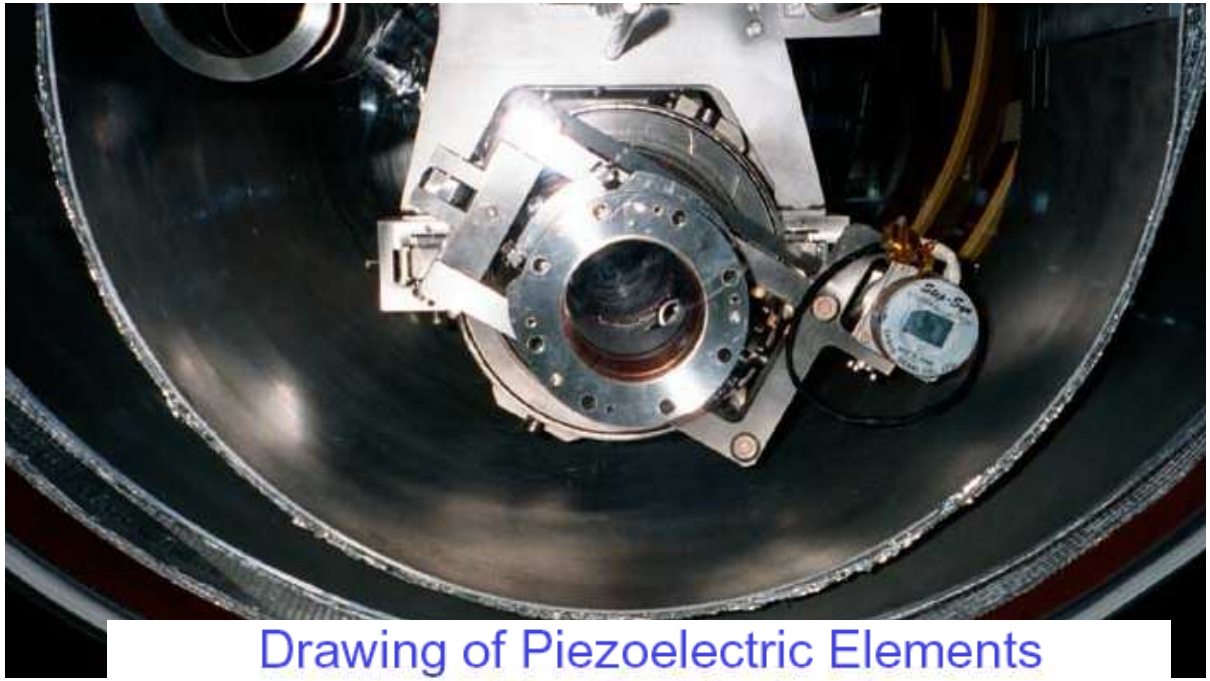

Drawing of Piezoelectric Elements
in the Tuning Mechanism

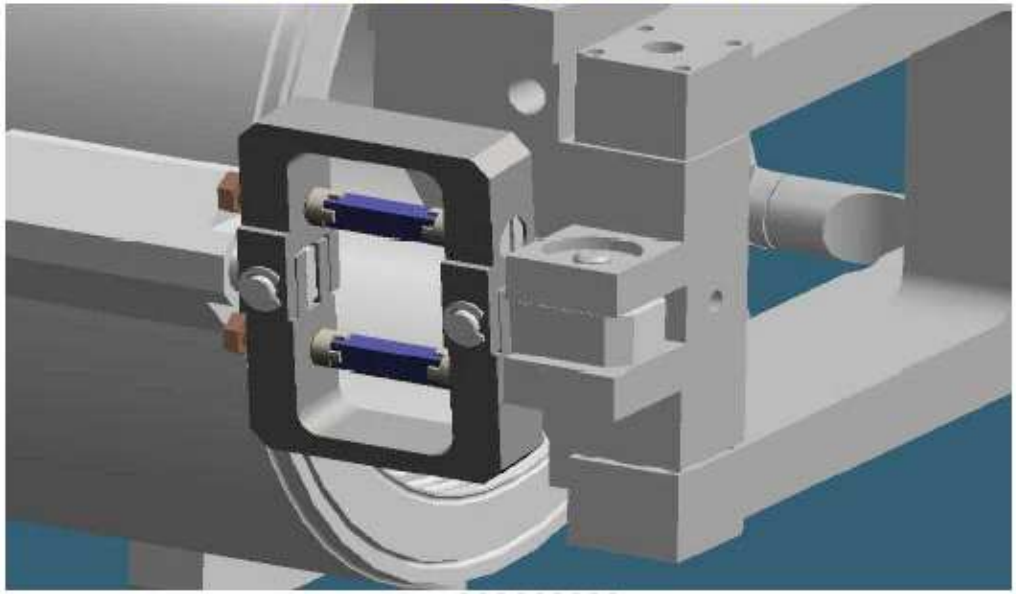

Active Tuner

- Lorentz force detunes the cavity during one RF pulse: If detuning is too large extra RF power would be needed
- Actively compensate the detuning of the cavity during the RF pulse by mechanical means
- Piezoelectric elements are suitable for this application (heavily used for fuel injection in car industry)

RF Signals at 35 MV/m

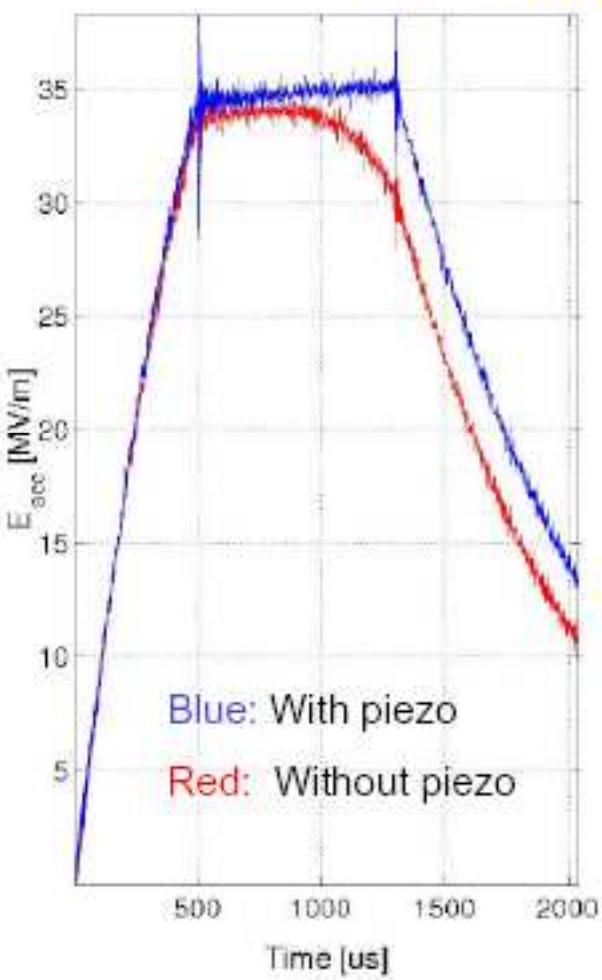

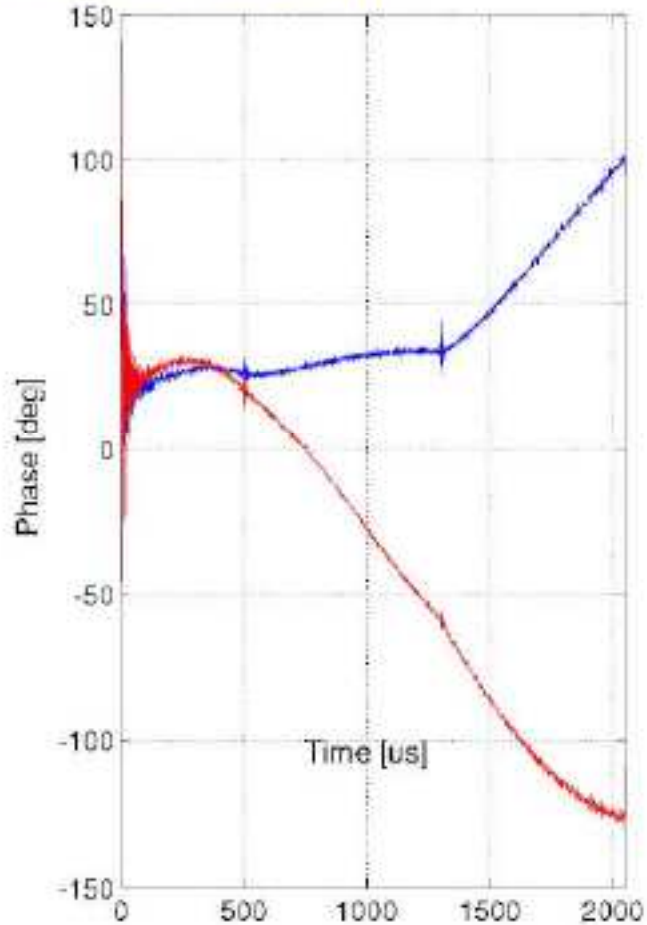

h 2004

Baseline Design: Based on DESY Blade Tuner

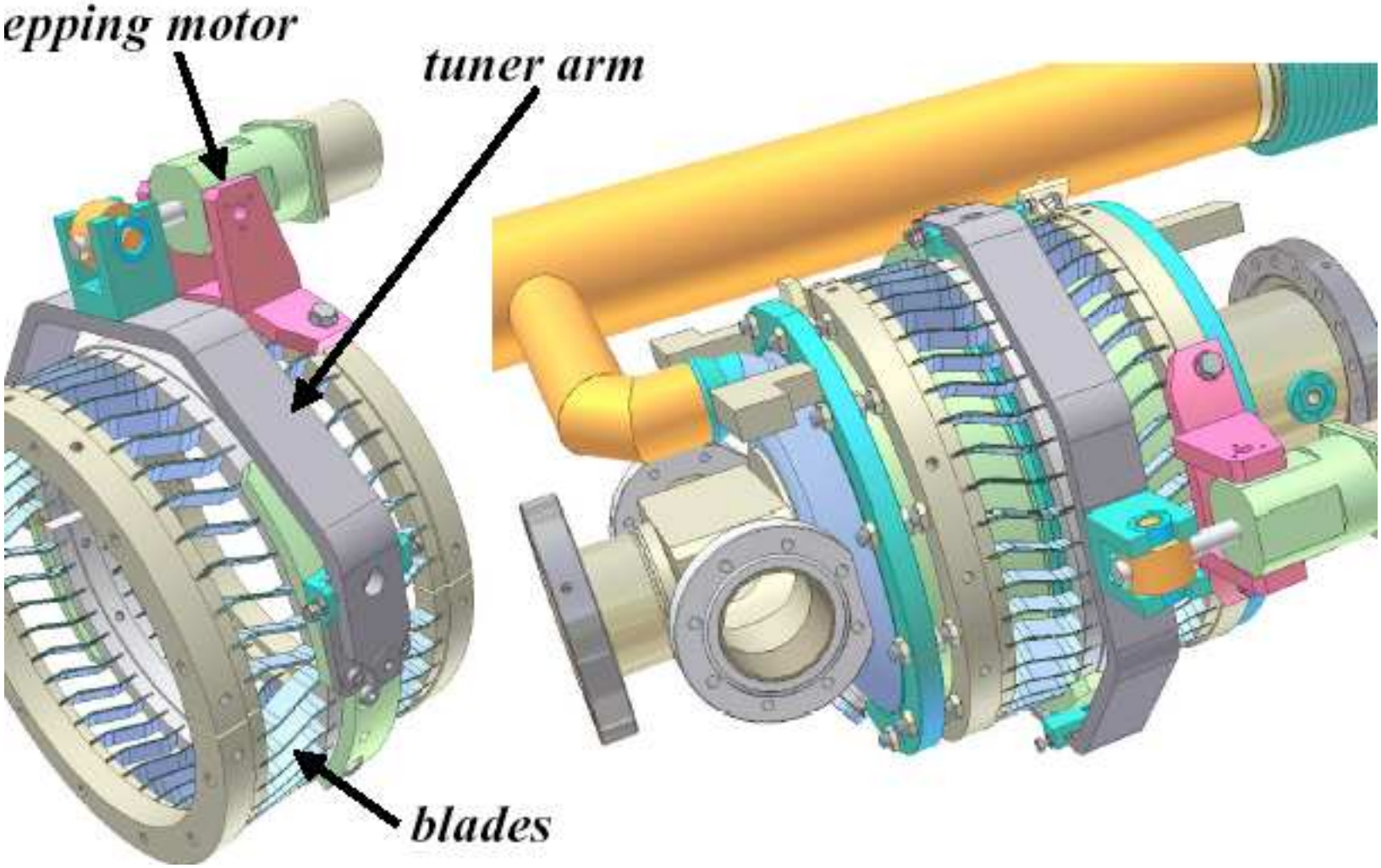

TTF: Blade Tuner

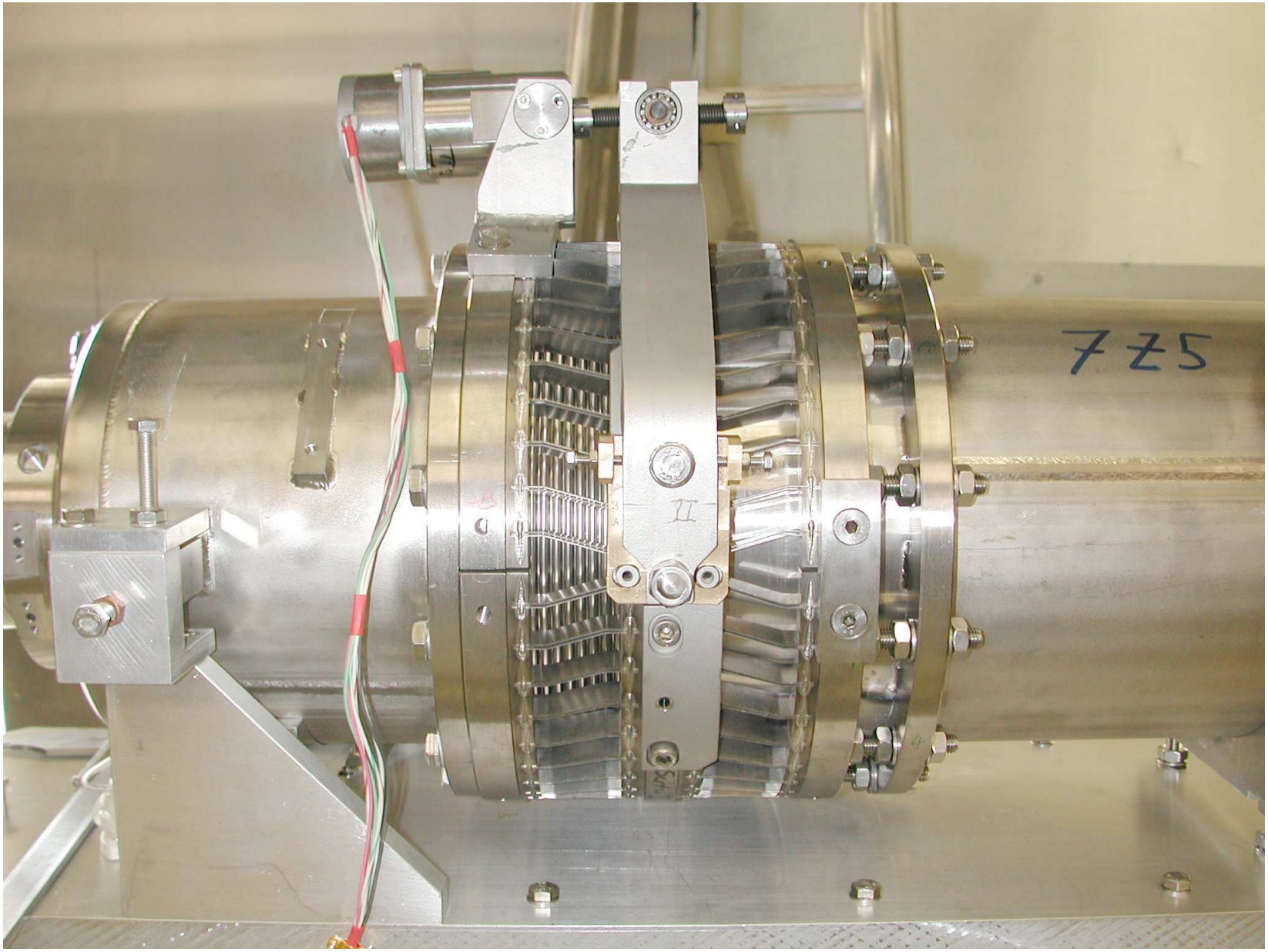

TTF: Detail of Blade Tuner

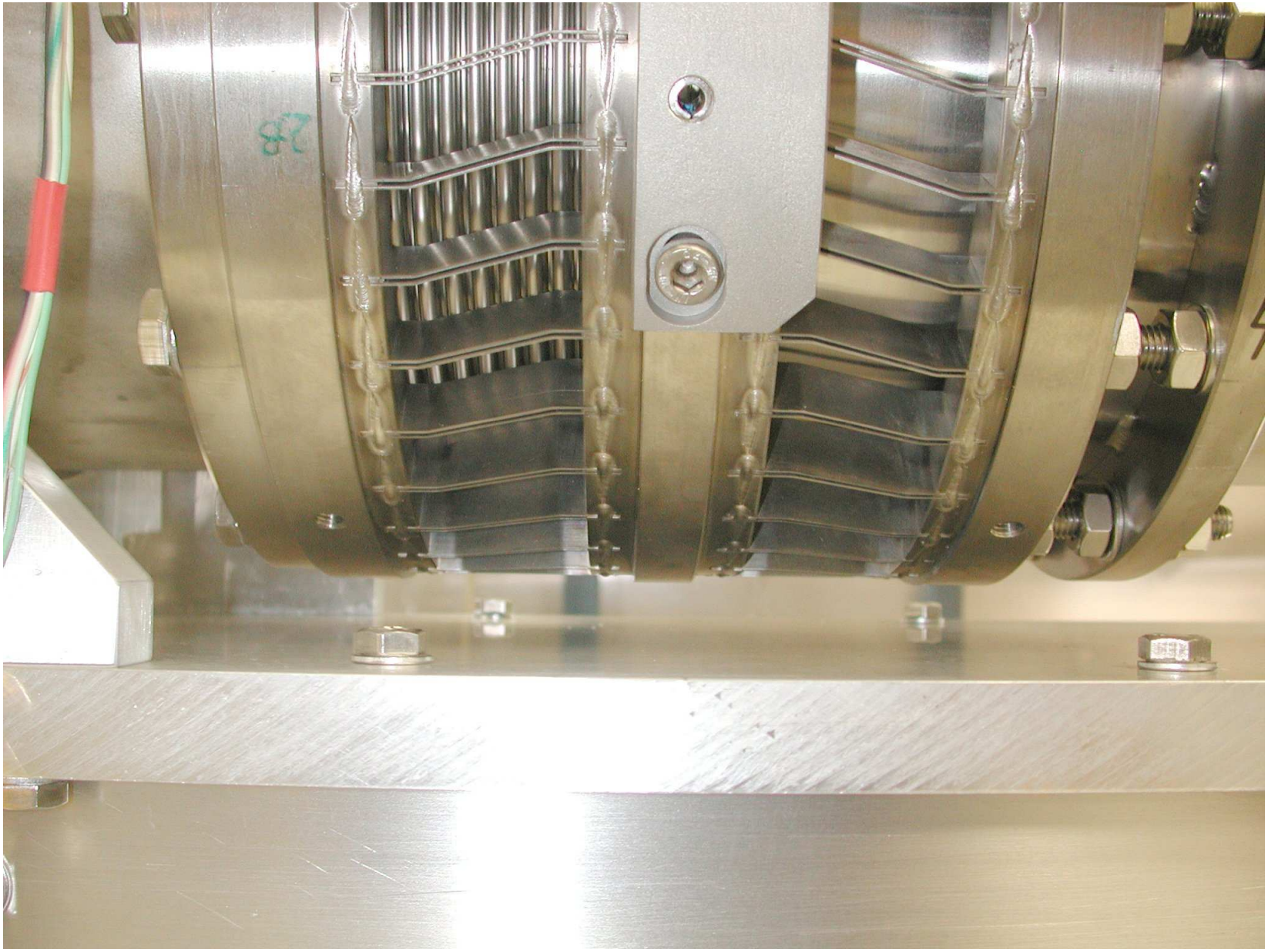

TTF: Tuner: Stepping Motor

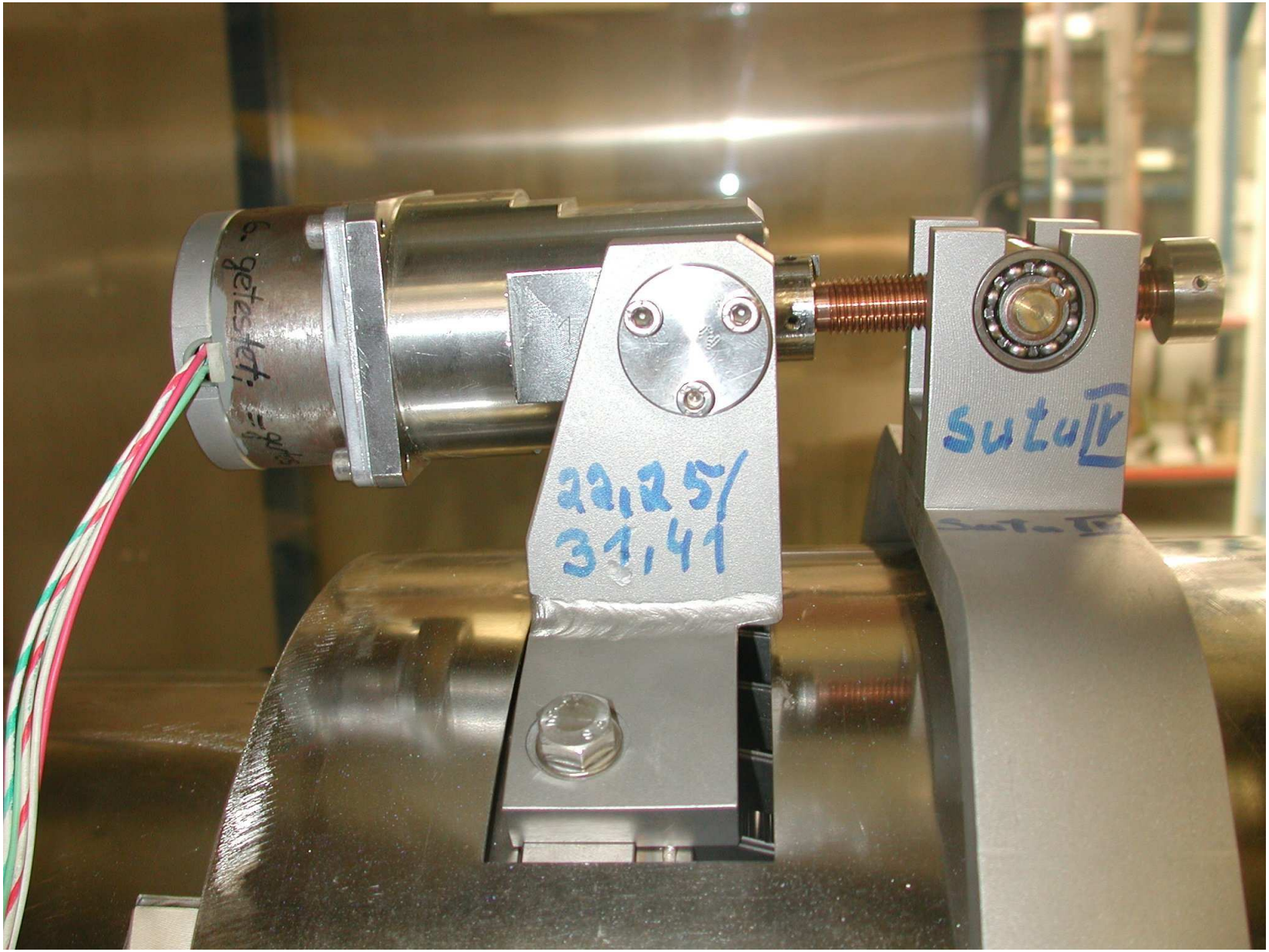
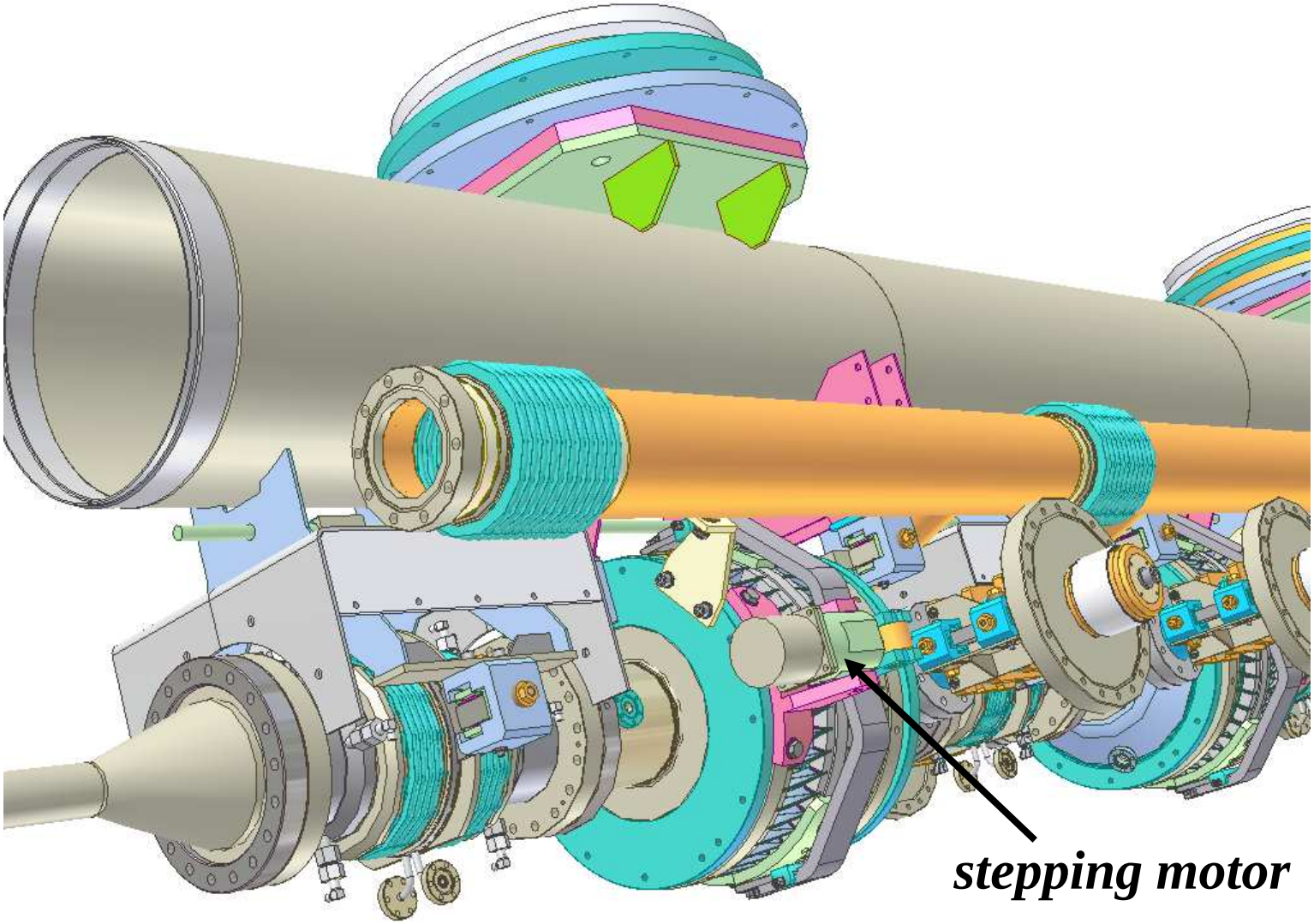
Baseline Design ERL Injector: Based on DESY Blade Tuner